FILLMORE MIDDLE SCHOOL - BUILDING F - GYM - HVAC REPLACEMENT

FILLMORE UNIFIED SCHOOL DISTRICT

543 A St, Fillmore, CA 93015

APPLICATION NUMBER: **03-125539**

FILE NUMBER: **56-11**

IDENTIFICATION STAMP
DIV. OF THE STATE ARCHITECT
APP: 03-125539 INC:
REVIEWED FOR
SS ☑ FLS ☑ ACS ☐
DATE: 03/27/2026

WESTGROUP DESIGNS

ARCHITECTURE I PLANNING I INTERIOR DESIGN
19900 MacArthur Boulevard I Suite 1000
Irvine I California I 92612
949.250.0880 I FAX 949.250.0882
www.westgroupdesigns.com

ISSUED FOR:

REVISIONS:

REGISTRATION/SIGNATURE:

LICENSED ARCHITECT
JOHN JAMES SMITH
C32284
03/27/27
Renewal Date
STATE OF CALIFORNIA

SHEET TITLE: **COVER SHEET**

SHEET NUMBER: **CS-0.1**

WD PROJ. #	DRAWN BY:	CHECKED	DATE
25817	Author	Checker	09/10/25

© WESTGROUP DESIGNS, INC.

ABBREVIATIONS

&	And
∠	Angle
@	At
℄	Centerline
°	Degree
PERP.⊥	Perpendicular
ℙ	Property Line
A.F.F.	Above Finish Floor
ACOUS.	Acoustical
ACT	Acoustical Ceiling Tile
ADJ.	Adjustable
AGGR.	Aggregate
A.B.	Aggregate Base
ALUM./AL.	Aluminum
ARCH.	Architectural
A.D.	Area Drain
A.C.	Asphalt Concrete
A.V.	Audio Visual
AUTO.	Automatic
BM.	Beam
BLK.	Block
BLKG.	Blocking
BD.	Board
BOT.	Bottom
BLDG.	Building
CAB.	Cabinet
CA'TV	Cable T.V.
C.I.	Cast Iron
C.B.	Catch Basin
CLKG.	Caulking
CLG.	Ceiling
CEM.	Cement
CNTR./CTR.	Center
CER.	Ceramic
C.L.	Chain Link
CB.	Chalkboard
C.R.	Classroom
CLR.	Clear
C.W.	Cold Water
COL.	Column
CONC.	Concrete
C.M.U.	Concrete Masonry Unit
CONN.	Connection
CONST.	Construction
C.J.	Construction Joint/ Control Joint
CONT.	Continuous
CONTR.	Contractor
CORR.	Corridor
C.M.P.	Corrugated Metal Pipe
C.Y.	Cubic Yard
CUST.	Custodian
D.	Deep/Depth
DET./DTL.	Detail
DIAG.	Diagonal
DIA./Ø	Diameter
DIM.	Dimension
DIM.PT.	Dimension Point
D.A.	Disabled Accessible
DW.	Dishwasher
DR.	Door
DBL.	Double
DN.	Down
DS.	Downspout
D.I.	Drain Inlet
DWG.	Drawing
D.F.	Drinking Fountain
EA.	Each
E.	East
ELEC.	Electrical
E.W.C.	Electric Water Cooler
E.W.H.	Electric Water Heater
EL./ELEV.	Elevation
EMER.	Emergency
ENCL.	Enclosure
EQ.	Equal
EQUIP.	Equipment
E.F.	Exhaust Fan
(E)/EXST.	Existing
EXP.	Expansion
E.J.	Expansion Joint
EXT.	Exterior
F.O.C.	Face of Concrete/Curb
F.O.F.	Face of Finish
F.O.S.	Face of Studs
FB.	Fiberboard
F.R.P.	Fiberglass Reinforced Panel
F.V.	Field Verify
FIN.	Finish
F.F.E.	Finish Floor Elevation
F.G.	Finish Grade
F.A.	Fire Alarm
F.E.	Fire Extinguisher
F.E.C.	Fire Extinguisher Cabinet
FLASH.	Flashing
F.H.M.B.	Flat Head Machine Bolt
F.H.M.S.	Flat Head Machine Screw
F.H.W.S.	Flat Head Wood Screw
FL./FLR.	Floor
F.D.	Floor Drain
FT.	Foot/Feet
FTG.	Footing
FND.	Foundation
FURR.	Furring
GALV.	Galvanized
G.I.	Galvanized Iron
G.S.M.	Galvanized Sheet Metal
G.W.H.	Gas Water Heater
GA.	Gauge
GLU LAM./G.L.B.	Glue Laminated (Beam)
G.B.	Grab Bar
GR.	Grade
GND.	Ground
GYP.	Gypsum
GYP.BD.	Gypsum Wallboard
HW.	Hardware
HDWD.	Hardwood
HDR.	Header
HVAC	Heating/Ventilating Air Conditioning
H./HT.	Height
H.M.	Hollow Metal
HOR./HORIZ.	Horizontal
H.B.	Hose Bib
HR.	Hour (Fire Rating)
IN.	Inch
INFO.	Information
I.D.	Inside Diameter
INSUL.	Insulation
INT.	Interior
INV.	Invert
JAN.	Janitor
JT.	Joint
JST.	Joist
KP.	Kickplate
KIT.	Kitchen
LAM.	Laminate
LAV.	Lavatory
LT.WT.	Light Weight
L.F.	Lineal Feet
M.B.	Machine Bolt
MH.	Manhole
MFR.	Manufacturer
M.O.	Masonry Opening
MAT'L.	Material
MAX.	Maximum
MECH.	Mechanical
MEMB.	Membrane
MTL.	Metal
MEZZ.	Mezzanine
MIN.	Minimum
MISC.	Miscellaneous
MTD.	Mounted
M.P.	Multipurpose
(N)	New
NOM.	Nominal
N.	North
N.I.C.	Not in Contract
N.T.S.	Not to Scale
NO./ #	Number
O.C.	On Center
OPP.	Opposite
O.H.	Opposite Hand
O.D.	Outside Diameter
O.H.W.S.	Oval Head Wood Screw
O/	Over
OA.	Overall
PT.	Paint
PR.	Pair
PTN./PART.	Partition
PEN.	Penetration
PERF.	Perforated
P.LAM.	Plastic Laminate
PL.	Plate
P.V.	Plumbing Vent
PLYWD.	Plywood
LBS./#	Pound
PRE-FAB.	Prefabricated
P.M.F.	Pressed Metal Frame
P.T./P.T.D.F.	Pressure Treated Douglas Fir
R.	Radius/Riser
R.W.L.	Rain Water Leader
RDWD.	Redwood
REF.	Reference
REFRIG.	Refrigerator
REINF.	Reinforced
REQ'D.	Required
RET.	Return
R.D.	Roof Drain
RM.	Room
R.O.	Rough Opening
R.H.W.S.	Round Head Wood Screw
R.B.	Rubber Base
SECT.	Section
S.SK.	Service Sink
SHTG.	Sheathing
SHT.	Sheet
S.M.	Sheet Metal
S.M.S.	Sheet Metal Screw
S.V.	Sheet Vinyl
SHR./SHWR.	Shower
SIM.	Similar
S.C.	Solid Core
S.	South
SPEC.	Specification
SQ.	Square
SST./S.S.	Stainless Steel
STD./STND.	Standard
STL.	Steel
STOR.	Storage
S.D.	Storm Drain
ST.	Street
STRUCT.	Structural
SUSP.	Suspended
SYM.	Symbol
TB.	Tackboard
TEL./TELE.	Telephone
T.V.	Television
T.CLR.	Tempered Clear
T.L.T.	Tempered Low Transmission
THK.	Thick
THRES.	Threshold
THRU.	Through
T./TLT.	Toilet
T&G	Tongue & Groove
T.O.	Top of
T.O.C.	Top of Curb
T.O.P.	Top of Pavement
T.O.W.	Top of Wall/Top of Walk
T.S.	Tube Steel
TYP.	Typical
U.N.O.	Unless Noted Otherwise
U.O.N.	Unless Otherwise Noted
VERT.	Vertical
V.G.D.F.	Vertical Grain Douglas Fir
V.C.T.	Vinyl Composition Tile
V.W.C.	Vinyl Wall Covering
V/F	Verify In Field
WSCT.	Wainscot
W.C.	Water Closet
W.H.	Water Heater
WT.	Weight
W.W.M.	Welded Wire Mesh
W.	West/Width
WDW.	Window
W.G.	Wire Glass
W/	With
W/O	Without
WD.	Wood
YD.	Yard
Y.D.	Yard Drain

DEFERRED SUBMITTALS

DOCUMENTS FOR DEFERRED SUBMITTAL ITEMS SHALL BE SUBMITTED TO THE ARCHITECT OF RECORD WHO SHALL REVIEW THEM AND FORWARD THEM TO ***THE BUILDING OFFICIAL*** WITH A NOTATION INDICATING THAT THE DEFERRED SUBMITTAL DOCUMENTS HAVE BEEN REVIEWED AND FOUND TO BE IN GENERAL CONFORMANCE TO THE DESIGN OF THE BUILDING.

ANY FORMATTING, CORRECTIONS, AND PREPARATION OF THE DOCUMENTS REQUIRED BY THE REVIEWING AGENCY SHALL BE COMPLETED PRIOR TO SUBMISSION OR RESUBMISSION TO THE ARCHITECT FOR REVIEW.

THE DEFERRED SUBMITTAL ITEMS SHALL NOT BE INSTALLED UNTIL THE DEFERRED SUBMITTAL DOCUMENTS HAVE BEEN APPROVED BY ***THE BUILDING OFFICIAL.***

THE CONTRACTOR SHALL PROVIDE DEFERRED SUBMITTALS TO THE ARCHITECT THAT ARE FORMATTED IN COMPLIANCE WITH DSA DOCUMENT PR 18-04.
THE DEFERRED SUBMITTAL ITEMS SHALL NOT BE INSTALLED UNTIL THE DEFERRED SUBMITTAL DOCUMENTS HAVE BEEN APPROVED BY ***DSA.***

DEFERRED SUBMITTAL ITEMS:

- NONE

FABRICATION AND INSTALLATION OF DEFERRED SUBMITTAL ITEMS SHALL NOT BE STARTED UNTIL DETAILS PLANS AND SPECIFICATIONS ARE APPROVED BY THE DIVISION OF THE STATE ARCHITECT.

ALLOW 90 DAYS FOR INTIAL REVIEW

THE PLAN AND SPECIFICATIONS SHALL BE STAMPED AND SIGNED BY THE ARCHITECT AND ENGINEER OF RECORD BEFORE SUBMITTING TO DSA.

THE CONTRACTOR SHALL PROVIDE DEFERRED SUBMITTALS TO THE ARCHITECT THAT ARE FORMATTED IN COMPLIANCE WITH DSA DOCUMENT PR 18-04.

HAZARDOUS MATERIAL DISCLAIMER

HAZARDOUS MATERIALS MAY BE PRESENT IN CONSTRUCTION TO BE SELECTIVELY DEMOLISHED. UPON DISCOVERY, IDENTIFICATION AND/OR REMEDIATION OF HAZARDOUS MATERIALS, REPORT TO THE CONSTRUCTION MANAGER AND OWNER. THE OWNER HAS FULL AND SINGLE RESPONSIBILITY FOR THESE MATERIALS AND DIRECTIVE FOR THEIR REMEDIATION.

GENERAL NOTES

1. SEE INDIVIDUAL SHEETS FOR LEGEND DESCRIPTIONS AND SHEET NOTES.
2. "ARCHITECT" AS USED IN THESE DOCUMENTS REFERS TO: WESTGROUP DESIGNS. (949) 250-0880.
3. REFERENCE TO MAKES, BRANDS, AND MODEL IS TO ESTABLISH TYPE AND QUALITY DESIRED. WHERE "OR EQUAL" IS STATED, THE ARCHITECT SHALL DETERMINE ACCEPTABILITY.
4. "TYPICAL" OR "TYP" AS USED IN THESE DOCUMENTS SHALL MEAN THAT THE CONDITION IS THE SAME OR REPRESENTATIVE FOR ALL SIMILAR CONDITIONS THROUGHOUT, U.N.O.
5. "SIMILAR" MEANS COMPARABLE CHARACTERISTICS FOR THE CONDITIONS NOTED. VERIFY DIMENSIONS & ORIENTATION ON PLANS & ELEVATIONS.
6. INSTALL ALL FINISH MATERIALS AND MANUFACTURED SYSTEMS PER THE MANUFACTURER'S INSTALLATION INSTRUCTIONS AS REQUIRED FOR THE JOB SPECIFIC APPLICATION.
7. VERIFY ALL DIMENSIONS AND SITE CONDITIONS BEFORE STARTING WORK. SHOULD A DISCREPANCY APPEAR IN THE CONTRACT DOCUMENTS, OR BETWEEN THE CONTRACT DOCUMENTS, NOTIFY THE ARCHITECT FOR INSTRUCTION ON HOW TO PROCEED.
8. SHOULD A CONFLICT OCCUR IN OR BETWEEN DRAWINGS AND SPECIFICATIONS, THE ARCHITECT SHALL BE ASKED FOR CLARIFICATION. IF A CONFLICT BETWEEN DRAWINGS AND SPECIFICATIONS IS BROUGHT TO THE ATTENTION OF THE ARCHITECT AFTER AWARD OF BID, NO ADDITIONAL COST TO THE PROJECT SHALL BE INCURRED FOR CLARIFYING TO PROCEED PER THE DRAWINGS OR SPECIFICATIONS.
9. DIMENSIONS:
   a. DO NOT SCALE DRAWINGS.
   b. ALL DIMENSIONS ARE TO THE FACE OF STUD, OR FACE OF CONCRETE, OR CENTERLINE OF COLUMN, UNLESS NOTED OTHERWISE.
   c. CEILING HEIGHT DIMENSIONS ARE FROM FINISH FLOOR TO FACE OF FINISH OF CEILING MATERIAL, UNLESS NOTED OTHERWISE.
   d. LARGE SCALE DRAWINGS SHALL GOVERN OVER SMALLER SCALE DRAWINGS.
   e. FINISH FLOOR ELEVATIONS ARE TO TOP OF CONCRETE, UNLESS NOTED OTHERWISE.
   f. "ALIGN" AS USED IN THESE DOCUMENTS SHALL MEAN TO ACCURATELY LOCATE FINISH FACES IN THE SAME PLANE.
10. WHERE NOTED "V.I.F. " OR "VERIFY", THE DIMENSIONS ARE TO BE CHECKED IN THE FIELD. NOTIFY THE ARCHITECT IF THE FIELD DIMENSIONS ARE NOT SUITABLE FOR THE INTENDED PURPOSE.
11. VERIFY SIZES AND LOCATIONS OF ALL MECHANICAL EQUIPMENT PADS AND BASES AS WELL AS POWER AND WATER OR DRAIN INSTALLATIONS WITH EQUIPMENT MANUFACTURERS BEFORE PROCEEDING WITH THE WORK. CHANGES TO ACCOMMODATE FIELD CONDITIONS OR SUBSTITUTIONS SHALL BE MADE WITHOUT ADDITIONAL CHARGES TO OWNER.
12. WHERE LARGER STUDS OR FURRING ARE REQUIRED TO COVER PIPING AND CONDUITS, THE LARGER STUD SIZE OR FURRING SHALL EXTEND THE FULL SURFACE OF THE WALL WIDTH AND LENGTH WHERE THE FURRING OCCURS. NOTIFY THE ARCHITECT OF ANY POTENTIAL CLEARANCE CONFLICTS.
13. PROVIDE ALL ACCESS PANELS AS REQUIRED BY GOVERNING CODES TO ALL CONCEALED SPACES, VOIDS, ATTICS, ETC. VERIFY TYPE AND LOCATION WITH ARCHITECT PRIOR TO INSTALLATION.
14. ALL BUILDING OR SITE CONSTRUCTION RUBISH AND DEBRIS SHALL BE REMOVED AND FLOORS SWEPT CLEAN ON A DAILY BASES; RUBISH AND DEBRIS SHALL NOT BE ALLOWED TO ACCUMULATE IN THE BUILDING OR ON SITE.
15. FIRE SAFETY DURING DEMOLITION AND CONSTRUCTION SHALL COMPLY WITH THE APPLICABLE REQUIREMENTS OF THIS CODE AND THE APPLICABLE PROVISIONS OF CHAPTER 33 OF CBC & CFC

PROJECT DIRECTORY

OWNER:
FILLMORE UNIFIED SCHOOL DISTRICT
707 First Street
Fillmore, CA 93015
805 524 8051

CONTACT:
RJ Stump
rj.stump@fillmoreusd.org

ARCHITECT:
WESTGROUP DESIGNS
19900 MacArthur Boulevard Suite 100
Irvine CA 92612
(949) 250 0880

CONTACT:
Roy Frey
royf@westgroupdesigns.com

CONSULTANTS:

STRUCTURAL ENGINEER
COAST ENGINEERING DESIGNS INC.
1500 Adams Ave., Ste 303
Costa Mesa, CA 92626
FARHAD REZAI
farhad@coastengr.com
(714) 593-0337

MECHANICAL/PLUMBING
DESIGN WEST ENGINEERING
412 E. Vanderbilt Way
San Bernardino, CA 92408
STEVEN JOHNSON
sjohnson@designwesteng.com
(909) 890-3700

ELECTRICAL/FIRE ALARM
DESIGN WEST ENGINEERING
412 E. Vanderbilt Way
San Bernardino, CA 92408
BRADEN KEMPTON
bkempton@designwesteng.com
(909) 890-3700

SHEET INDEX

SHEET #	SHEET NAME
GENERAL INFORMATION AND CODE	
CS-0.1	COVER SHEET
CS-0.2	GENERAL NOTES & SHEET INDEX
ARCHITECTURAL	
A-0.1	SITE PLAN
A-1.1	MECHANICAL ENCLOSURE FLOOR PLAN AND DETAILS
A-2.1	CEILING PLAN - DEMOLITION AND IMPROVEMENT
STRUCTURAL	
S-1	PARTIAL ROOF FRAMING PLAN
SD 1	STRUCTURAL NOTES, TYPICAL DETAILS, AND SECTIONS
SD 2	OUTDOOR CONDENSING UNITS FOUNDATION & ANCHORAGE DETAILS, FAN COIL SUPPORT PLATFORM & ISOLATORS SPECS
MECHANICAL	
M0-01	MECHANICAL LEGENDS NOTES & SCHEDULES
M0-02	MECHANICAL SCHEDULES CONTINUED
M1-1.2	MECHANICAL SITE PLAN
M2-1.1	MECHANICAL DEMOLITION PLAN - FIRST FLOOR
M2-1.2	MECHANICAL DEMOLITION PLAN - ROOF
M3-1.1	MECHANICAL PLAN - FIRST FLOOR
M3-1.2	MECHANICAL PLAN - ROOF
M4-1.1	MECHANICAL DETAILS
M-5.1	T24 COMPLIANCE DOCUMENTS
M-5.2	T24 COMPLIANCE DOCUMENTS CONT.
ELECTRICAL	
E0-0.1	ELECTRICAL LEGENDS & NOTES
E0-0.2	SINGLE LINE DIAGRAM & PANEL SCHEDULES
E2-1.1	DEMOLITION PLAN - FIRST FLOOR
E2-1.2	DEMOLITION PLAN - ROOF
E3-1.1	POWER PLAN - FIRST PLAN
E3-1.2	POWER PLAN - ROOF
E4-1.1	ELECTRICAL DETAILS
FIRE ALARM	
FA0-0.1	FIRE ALARM LEGENDS & NOTES
FA0-0.2	FIRE ALARM RISER DIAGRAM & BATTERY CALCS
FA1-1.1	FIRE ALARM SITE PLAN
FA2-2.1	FIRE ALARM DEMO PLAN - FIRST FLOOR
FA2-3.1	FIRE ALARM PLAN - FIRST FLOOR
FA3-1.1	FIRE ALARM DETAILS
NUMBER OF SHEETS: 31	

SYMBOL LEGEND

SHEET NUMBERING SYSTEM
A1-1.1 — Discipline Designation; Drawing Type Designation; Floor Level; Sheet Sequence

ROOM NAME and NUMBERING REFERENCE
Room Name
101 — Room Number

KEYNOTE REFERENCE
3.02

SHEET NOTE REFERENCE
SN.01

DEMOLITION NOTE REFERENCE
DN.01

DETAIL REFERENCE
X / AX.X.X — Detail Number; Sheet Number

BUILDING AND WALL SECTION REFERENCE
1 / A101 — Section Number; Sheet Number

STRUCTURAL GRID IDENTIFIER
(center of framing)
— Grid Designation

A — Wall Type; Stud Size; Acoustic Batt Insulation; 6"-0" Low Partition Height

Door Designation

Window Designation

Accessory Designation

CENTERLINE

WORK POINT CONTROL

REVISION
1 — Revision Number

RADIUS
R=9'2"-4" (1) — Radius Point Number; Radius Dimension

EXTERIOR ELEVATION REFERENCE
Elevation Number; Sheet Number

INTERIOR ELEVATION REFERENCE
a / A101 / b

DSA NOTES

1. ALL WORK SHALL CONFORM TO 2022 TITLE 24, CALIFORNIA CODE OF REGULATIONS (CCR).

2. CHANGES TO THE APPROVED DRAWINGS AND SPECIFICATIONS SHALL BE MADE BY AN ADDENDUM OR A CONSTRUCTION CHANGE DOCUMENT (CCD) APPROVED BY THE DIVISION OF THE STATE ARCHITECT, AS REQUIRED BY SECTION 4-338, PART 1, TITLE 24, CCR.

3. A "DSA CERTIFIED" PROJECT INSPECTOR EMPLOYED BY THE DISTRICT (OWNER) AND APPROVED BY THE DSA SHALL PROVIDE CONTINUOUS INSPECTION OF THE WORK. THE DUTIES OF THE INSPECTOR ARE DEFINED IN SECTION 4-342, PART 1, TITLE 24, CCR. A MINIMUM CLASS III INSPECTOR IS REQUIRED FOR THIS PROJECT.

4. A DSA ACCEPTED TESTING LABORATORY DIRECTLY EMPLOYED BY THE DISTRICT (OWNER) SHALL CONDUCT ALL THE REQUIRED TESTS AND INSPECTIONS FOR THE PROJECT.

5. THE INTENT OF THESE DRAWINGS AND SPECIFICATIONS IS THAT THE WORK OF THE ALTERATION, REHABILITATION OR RECONSTRUCTION IS TO BE IN ACCORDANCE WITH TITLE 24, CCR. SHOULD ANY EXISTING CONDITIONS SUCH AS DETERIORATION OR NON-COMPLYING CONSTRUCTION BE DISCOVERED WHICH IS NOT COVERED BY THE CONTRACT DOCUMENTS WHEREIN THE FINISHED WORK WILL NOT COMPLY WITH TITLE 24, CCR, A CONSTRUCTION CHANGE DOCUMENT (CCD), OR A SEPARATE SET OF PLANS AND SPECIFICATIONS, DETAILING AND SPECIFYING THE REQUIRED WORK SHALL BE SUBMITTED TO AND APPROVED BY DSA BEFORE PROCEEDING WITH THE WORK. (SECTION 4-317(C), PART 1, TITLE 24, CCR).

6. GRADING PLANS, DRAINAGE IMPROVEMENTS, ROAD AND ACCESS REQUIREMENTS AND ENVIRONMENTAL HEALTH CONSIDERATIONS SHALL COMPLY WITH ALL LOCAL ORDINANCES.

7. THE CALIFORNIA ENERGY CODE SECTION 10-103 REQUIRES ACCEPTANCE TESTING ON ALL NEWLY INSTALLED LIGHTING CONTROLS, MECHANICAL SYSTEMS, ENVELOPES, AND PROCESS EQUIPMENT AFTER INSTALLATION AND BEFORE PROJECT COMPLETION. AN ACCEPTANCE TEST IS A FUNCTIONAL PERFORMANCE TEST TO HELP ENSURE THAT NEWLY INSTALLED EQUIPMENT IS OPERATING AND IN COMPLIANCE WITH THE ENERGY CODE.

8. LIGHTING CONTROLS ACCEPTANCE TESTS MUST BE PERFORMED BY A CERTIFIED LIGHTING CONTROLS ACCEPTANCE TEST TECHNICIAN (ATT).

9. MECHANICAL SYSTEM ACCEPTANCE TESTS MUST BE PERFORMED BY A CERTIFIED MECHANICAL ATT FOR PROJECTS SUBMITTED ON OR AFTER OCTOBER 1, 2021.

10. ENVELOPE AND PROCESS EQUIPMENT ACCEPTANCE TESTS SHALL BE PERFORMED BY THE INSTALLING CONTRACTOR.

11. A LISTING OF CERTIFIED ATT CAN BE FOUND AT: HTTPS://WWW.ENERGY.CA.GOV/PROGRAMS-AND-TOPICS/PROGRAMS/ACCEPTANCE-TEST-TECHNICIAN-CERTIFICATION-PROVIDER-PROGRAM/ACCEPTANCE.

12. THE ACCEPTANCE TESTING PROCEDURES MUST BE REPEATED, AND DEFICIENCIES MUST BE CORRECTED BY THE BUILDER OR INSTALLING CONTRACTOR UNTIL THE CONSTRUCTION/INSTALLATION OF THE SPECIFIED SYSTEMS CONFORM AND PASS THE REQUIRED ACCEPTANCE CRITERIA.

13. PROJECT INSPECTORS WILL COLLECT THE FORMS TO CONFIRM THAT THE REQUIRED ACCEPTANCE TESTS HAVE BEEN COMPLETED.

14. SUBSTITUTIONS AFFECTING ITEMS REGULATED BY DIVISION OF THE STATE ARCHITECT (DSA) REQUIRE DSA APPROVAL AS AN ADDENDUM OR A CONSTRUCTIONS CHANGE DOCUMENT (CCD). DSA APPROVAL SHALL BE OBTAINED PRIOR TO FABRICATION AND /OR INSTALLATION PER SECTION 4-338, PART 1, TITLE 24, CCR

PARTIAL LIST OF APPLICABLE CODES AND STANDARDS

LIST OF APPLICABLE CODES

2025 California Administrative Code (CAC), Part 1, Title 24 CCR
2022 California Building Code (CBC), Part 2, Title 24 CCR
2022 California Electrical Code (CEC), Part 3, Title 24 CCR
2022 California Mechanical Code (CMC), Part 4, Title 24 CCR
2022 California Plumbing Code (CPC), Part 5, Title 24 CCR
2022 California Energy Code (CEC), Part 6, Title 24 CCR
2022 California Fire Code (CFC), Part 9, Title 24 CCR
2022 California Existing Building Code (CEBC), Part 10, Title 24 CCR
2022 California Green Building Standards Code (CALGreen), Part 11, Title 24 CCR
2022 California Referenced Standards Code, Part 12, Title 24 CCR
Title 19 CCR, Public Safety, State Fire Marshal Regulations

APPLICABLE STANDARDS

For a list of applicable standards, including California amendments to the NFPA Standards, refer to CBC Chapter 35 and CFC Chapter 80.

SCOPE OF WORK

PROJECT DESCRIPTION:

Mechanical system replacement and associated electrical improvements in the Building F (Gym)

Roofing Type: Built-Up Class A Roofing

CALIFORNIA CLIMATE ZONE: 9

Based on FEMA map, the site is not located within a flood hazard area.

SPRINKLERED = YES
CONSTRUCTION TYPE = III
OCCUPANCY TYPE = A
BUILDING AREA (SF) = 12,637 SQ FT

STATEMENT OF GENERAL CONFORMANCE

FOR ARCHITECTS/ENGINEERS WHO UTILIZE PLANS, INCLUDING BUT NOT LIMITED TO SHOP DRAWINGS, PREPARED BY OTHER LICENSED DESIGN PROFESSIONALS AND/OR CONSULTANTS

(Application No. 03-125539 File No. 56-11)

☒ All drawing sheets included in this set not bearing my stamp and signature
☐ Drawing sheets denoted in the sheet index as follows:
☐ Drawing sheets included under the follwoing PC approcal(s):

have been prepared by other design professionals or consultants who are licensed and/or authorized to prepare such drawings in this state. It has been examined by me for:

1) Design intent and appears to meet the appropriate requirements of Title 24, California Code of Regulations and the project specifications prepared by me.
2) Coordination with my plans and specifications and is acceptable for incorporation into the construction of this project.

The Statement of General Conformance "shall not be construed as relieving me of my rights, duties, and responsibilities under Sections 17302 and 81138 of the Education Code and Sections 4-336, 4-341 and 4-344" of Title 24, Part 1. *(Title 24, Part 1, Section 4-317 (b))*

I certify that: ☒ The drawings or sheets listed on the cover or index sheet ☒ This drawing or page

☒ is/are in general conformance and	☐ is/are in general conformance and
☒ have been coordinated	☐ have been coordinated
Signature: 09.09.2025 Date	Signature: Date
Architect or Engineer designated to be in general responsible charge	Architect or Engineer deligated responsibility for this portion of the work
Joshua Smith	
Print Name	Print Name
C-32284 — 05.31.2027	
License Number — Expiration Date	License Number — Expiration Date

VICINITY MAP

IDENTIFICATION STAMP
DIV. OF THE STATE ARCHITECT
APP: 03-125539 INC:
REVIEWED FOR
SS ☑ FLS ☑ ACS ☐
DATE: 03/27/2026

WESTGROUP DESIGNS

19900 MacArthur Boulevard I Suite 1000
Irvine I California I 92612
949.250.0880 I FAX 949.250.0882
www.westgroupdesigns.com

FILLMORE MIDDLE SCHOOL - BUILDING F - GYM - HVAC REPLACEMENT

FILLMORE UNIFIED SCHOOL DISTRICT
543 A St, Fillmore, CA 93015

ISSUED FOR:

REVISIONS:

REGISTRATION/SIGNATURE:
LICENSED ARCHITECT — JOSHUA JAMES SMITH — C32284 — 05/31/2027 Renewal Date — STATE OF CALIFORNIA

SHEET TITLE:
GENERAL NOTES & SHEET INDEX

SHEET NUMBER:
CS-0.2

WD PROJ. #	DRAWN BY:	CHECKED	DATE
25817	WD	WD	09/10/25

© WESTGROUP DESIGNS, INC.

ARCHITECTURAL SITE PLAN | 1 | 1" = 40'-0"

LEGEND

- PROPERTY LINE
- CHAIN LINK FENCING
- HARDSCAPE - ASPHALT PAVING
- EXISTING HARDSCAPE - CONCRETE PAVING
- EXISTING SOFTSCAPE - GRASS
- EXISTING BUILDING
- PROJECT SCOPE OF WORK

GENERAL NOTES

1. THE ARCHITECTURAL SITE PLAN IS FOR REFERENCE ONLY.

DSA CERTIFICATION TABLE

A#	APPROVAL DATE	CERTIFICATION STATUS	PROJECT RELEVANCE
A# 51861	1989	Closed	NEW MIDDLE SCHOOL (INCREMENT 1) 1ST PHASE OF GYM (BUILDING F)
A# 53179	1989	Closed	NEW MIDDLE SCHOOL (INCREMENT 1A) 2ND PHASE OF GYM (BUILDING F)
A# 68749	1997	Closed	NEW MIDDLE SCHOOL (INCREMENT 2) 3RD PHASE OF GYM (BUILDING F)
A# 03-119385	08/04/2021	Closed	EVAC Fire Alarm System for Building F

IDENTIFICATION STAMP
DIV. OF THE STATE ARCHITECT
APP: 03-125539 INC:
REVIEWED FOR
SS ☑ FLS ☑ ACS ☐
DATE: 03/27/2026

WESTGROUP DESIGNS
19900 MacArthur Boulevard I Suite 1000
Irvine I California I 92612
949.250.0880 I FAX 949.250.0882
www.westgroupdesigns.com

FILLMORE MIDDLE SCHOOL - BUILDING F - GYM - HVAC REPLACEMENT

FILLMORE UNIFIED SCHOOL DISTRICT
543 A St, Fillmore, CA 93015

ISSUED FOR:

REVISIONS:

REGISTRATION/SIGNATURE:
LICENSED ARCHITECT
JOSHUA JAMES
C32284
09/30/2027
Renewal Date
STATE OF CALIFORNIA

SHEET TITLE:
SITE PLAN

SHEET NUMBER:
A-0.1

WD PROJ. #	DRAWN BY:	CHECKED	DATE
25817	Author	Checker	09/10/25

© WESTGROUP DESIGNS, INC.

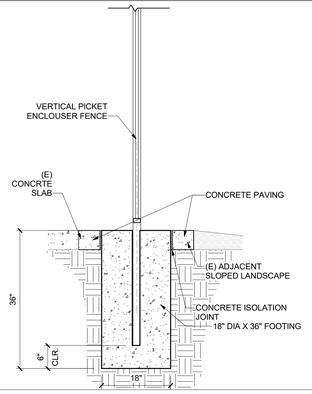

FENCE POST FOOTING @ CORNER | 16 | 3/4" = 1'-0"

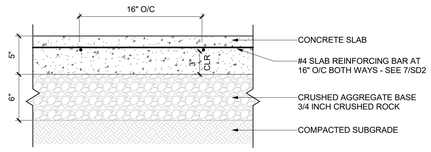

CONCRETE SLAB ON GRADE | 7 | 1 1/2" = 1'-0"

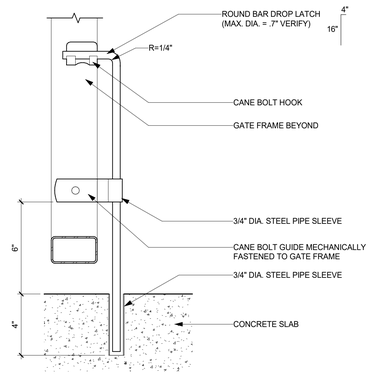

CANE BOLT | 6 | 3" = 1'-0"

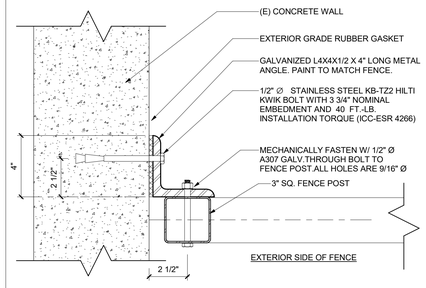

NOTE:
PROVIDE (3) INSTANCES AT 6' HIGH GATE ALL AT EQUAL DISTANCE. ALIGN TOP AND BOTTOM ANGLE CONNECTIONS WITH TOP AND BOTTOM FENCE RAILS.

FENCE ATTACHMENT @ (E) CONCRETE WALL | 5 | 3" = 1'-0"

GENERAL NOTES

1. DEMOLITION, REMOVAL AND PATCHING, SCOPE OF WORK TO INCLUDE:
   a. PROTECTION OF EXISTING WORK TO REMAIN.
   b. TEMPORARY PARTITIONS AND BARRICADES.
   c. REMOVAL OF ITEMS SHOWN.
   d. REMOVAL, STORAGE, PROTECTION AND INSTALLATION OF ITEMS TO BE REUSED.
   e. REMOVAL OF EXISTING ITEMS AS NECESSARY TO PROVIDE FOR NEW CONSTRUCTION.
   f. RELOCATION OF INDICATED ITEMS.
   g. DEBRIS REMOVAL.
   h. PATCHING AS NECESSARY TO MATCH EXISTING.
2. INCLUDE THE REWORKING OF ABUTTING SURFACE AS REQUIRED TO MAKE NEW WORK JOIN AND MATCH EXISTING SURFACES TO REMAIN.
3. ITEMS TO BE REUSED: EXERCISE THE GREATEST POSSIBLE CARE WHEN REMOVING ITEMS SCHEDULED FOR REUSE. USE ONLY MECHANICS SKILLED IN THE APPROPRIATE CRAFTS. IDENTIFY POINT OF REUSE, STORE AND PROTECT AT LOCATIONS DIRECTED.
4. ITEMS OF EXISTING WORK INDICATED TO REMAIN UPON COMPLETION OF THE CONTRACT, BUT WHICH REQUIRE REMOVAL, TO COMPLETE THE WORK, SHALL BE CAREFULLY REMOVED AND REPLACED UPON COMPLETION. THE REPLACED WORK SHALL MATCH ITS CONDITION AT THE START OF THE WORK.
5. PROTECT THE BUILDING OWNER'S PROPERTY, INCLUDING NOT IN CONTRACT AREAS ACCESSIBLE TO CONTRACTOR. CONTRACTOR TO REPLACE ANYTHING DAMAGED DURING CONSTRUCTION AT NO COST TO THE OWNER.

THE FENCE DETAILS SHOWN ON THIS SHEET ARE EXEMPT FROM DSA STRUCTURE SAFETY REVIEW AND ARE NOT A PART OF THE STRUCTURAL SAFETY APPROVAL PER IR A-22

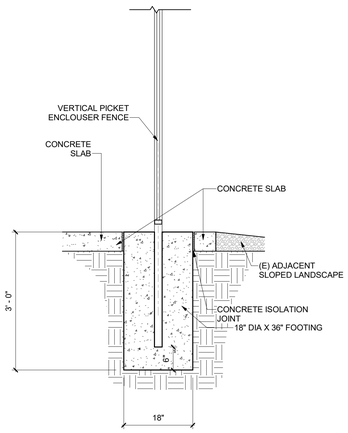

FENCE POST FOOTING @ CENTER | 15 | 3/4" = 1'-0"

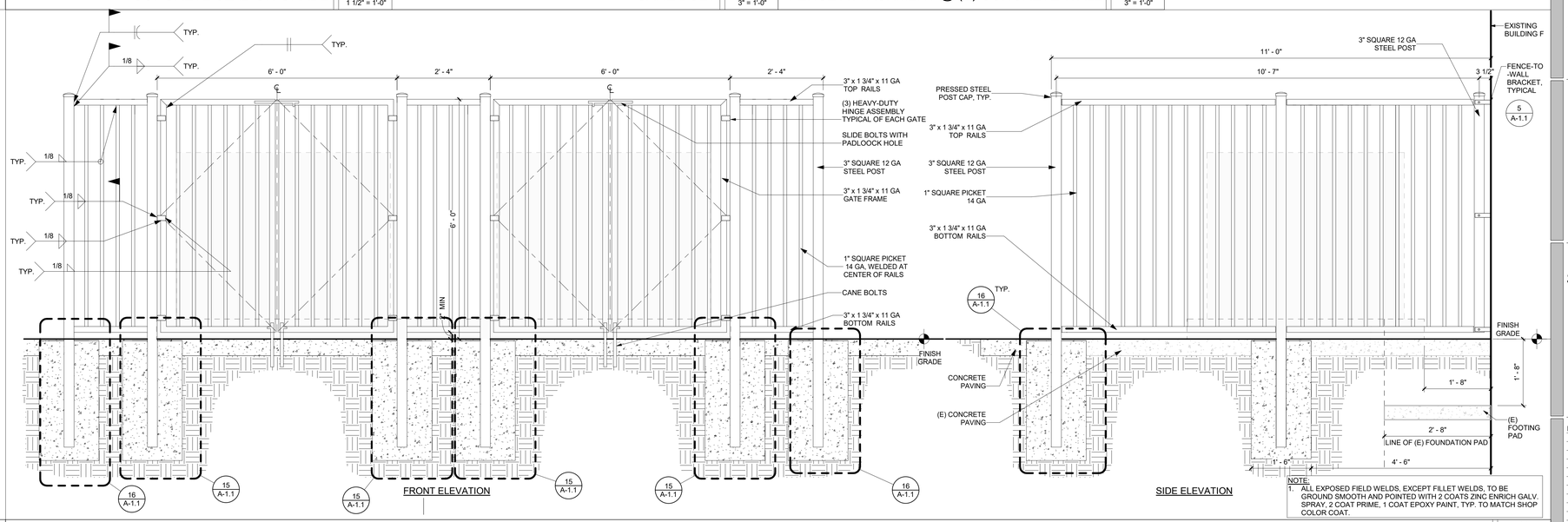

NOTE:
1. ALL EXPOSED FIELD WELDS, EXCEPT FILLET WELDS, TO BE GROUND SMOOTH AND POINTED WITH 2 COATS ZINC ENRICH GALV. SPRAY, 2 COAT PRIME, 1 COAT EPOXY PAINT, TYP. TO MATCH SHOP COLOR COAT.

MECHANICAL ENCLOSURE FENCE ELEVATIONS | 3 | 3/4" = 1'-0"

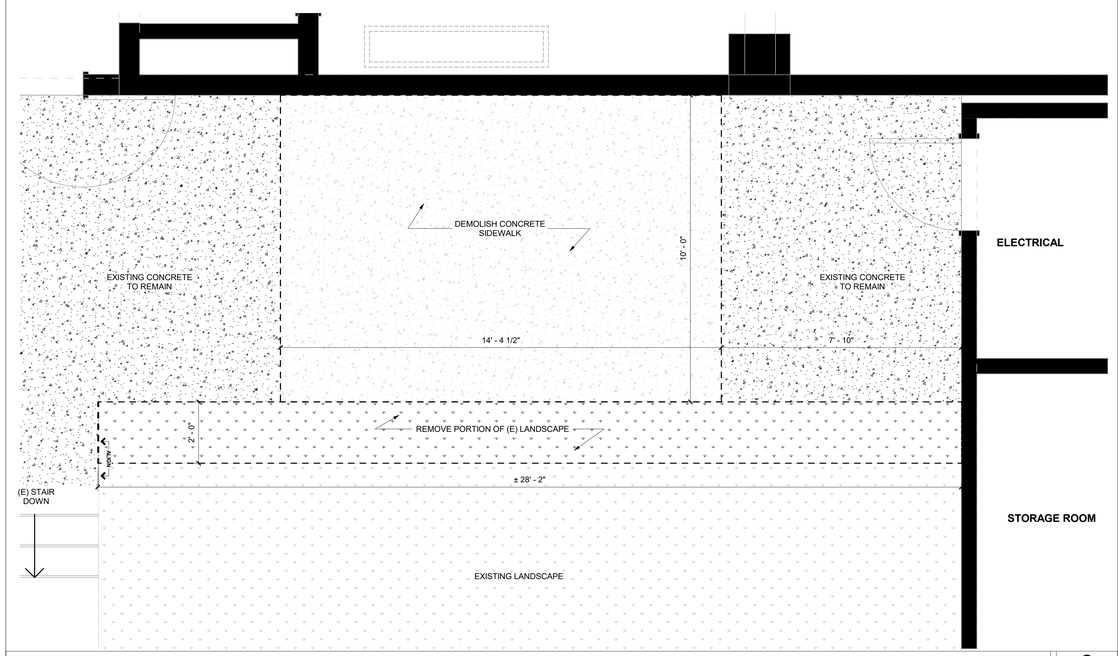

MECHANICAL ENCLOSURE PLAN - DEMOLITION | 2 | 1/2" = 1'-0"

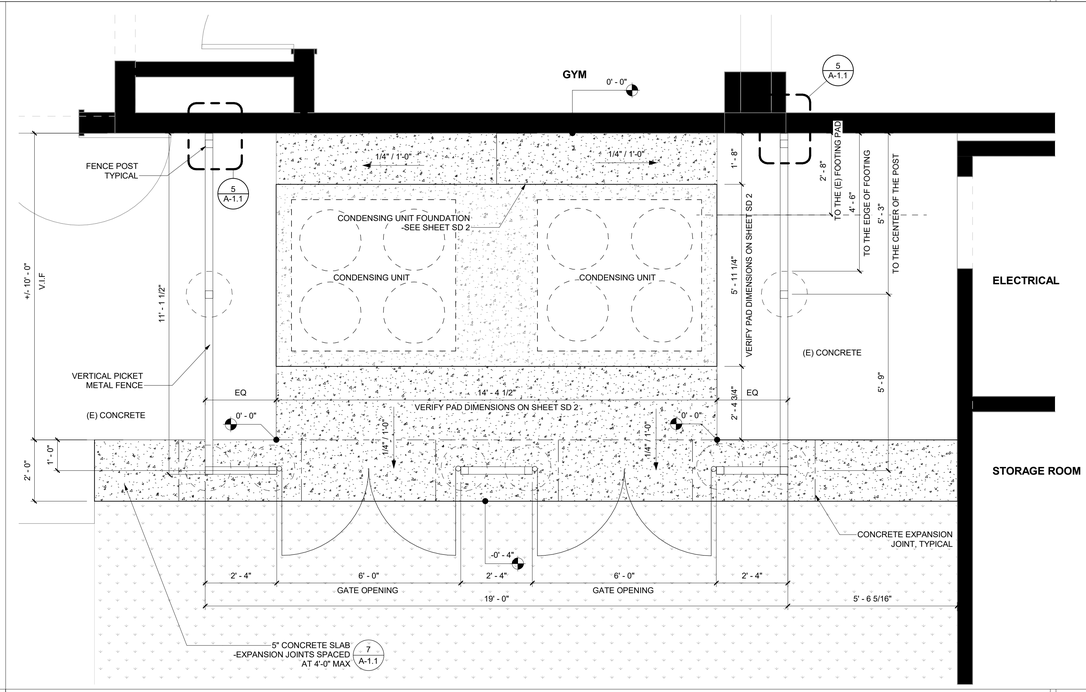

MECHANICAL ENCLOSURE PLAN - IMPROVEMENT | 1 | 1/2" = 1'-0"

IDENTIFICATION STAMP
DIV. OF THE STATE ARCHITECT
APP: 03-125539 INC:
REVIEWED FOR
SS ☑ FLS ☑ ACS ☐
DATE: 03/27/2026

WESTGROUP DESIGNS
19900 MacArthur Boulevard I Suite 1000
Irvine I California I 92612
949.250.0880 I FAX 949.250.0882
www.westgroupdesigns.com

FILLMORE MIDDLE SCHOOL - BUILDING F - GYM - HVAC REPLACEMENT

FILLMORE UNIFIED SCHOOL DISTRICT

543 A St, Fillmore, CA 93015

ISSUED FOR:

REVISIONS:

REGISTRATION/SIGNATURE:

LICENSED ARCHITECT
SHAUN JAMES SMITH
C32284
Expiration Date: 01/31/27
Renewal Date:
STATE OF CALIFORNIA

SHEET TITLE:

MECHANICAL ENCLOSURE FLOOR PLAN AND DETAILS

SHEET NUMBER:

A-1.1

WD PROJ. #	DRAWN BY:	CHECKED	DATE
25817	WD	WD	09/10/25

© WESTGROUP DESIGNS, INC.

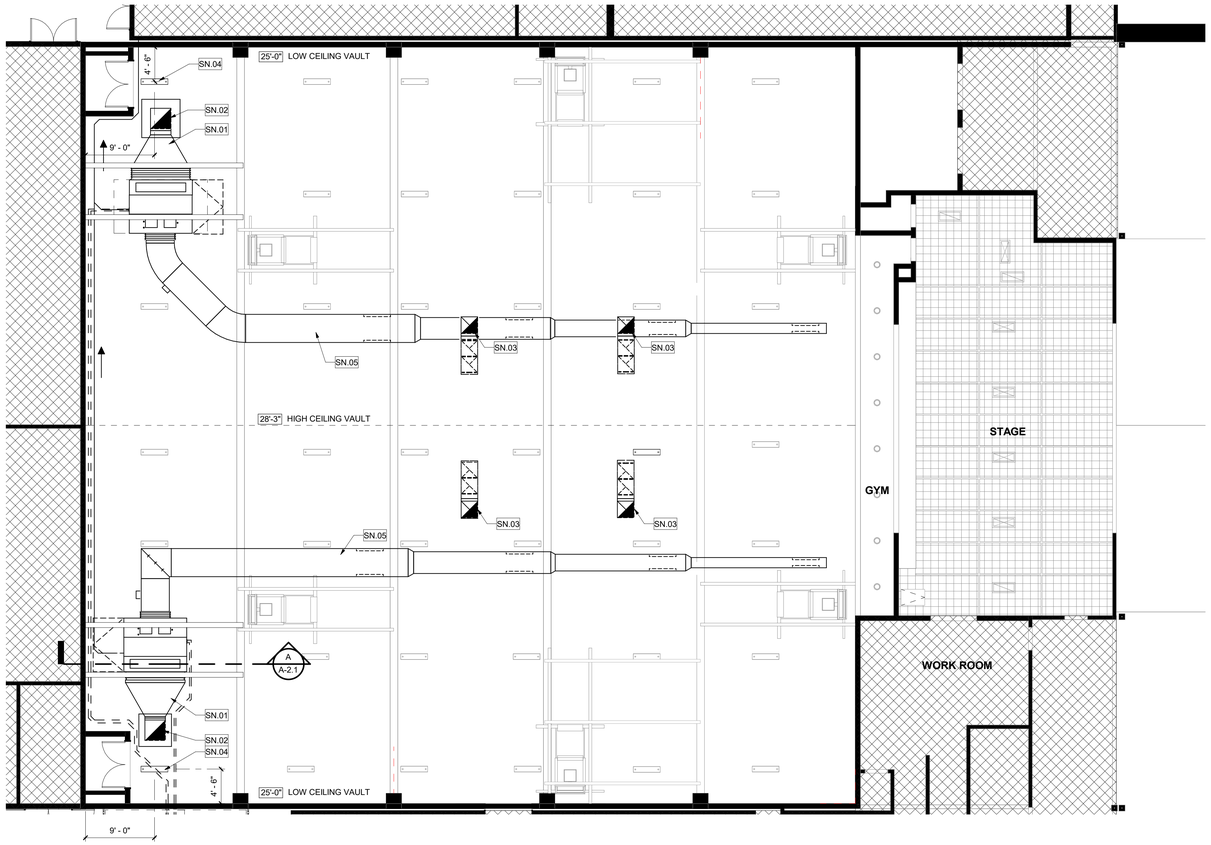

CEILING PLAN - IMPROVEMENT | 1 | 1/8" = 1'-0"

CEILING PLAN - DEMOLITION | 2 | 1/8" = 1'-0"

GENERAL NOTES

1. CENTER CEILING TILE IN ROOM U.N.O.
2. NOTIFY WESTGROUP DESIGNS OF ANY DISCREPANCIES BETWEEN ARCHITECTURAL AND ELECTRICAL OR MECHANICAL DRAWINGS AND OBTAIN CLARIFICATION BEFORE COMMENCING WITH CONSTRUCTION.
3. ACCESS HATCHES IN GYPSUM BOARD CEILING SHALL BE APPROVED BY ARCHITECT PRIOR TO INSTALLATION.
4. LIGHT SENSOR LOCATIONS AS DETERMINED BY THE ELECTRICAL ENGINEER SHALL BE FIELD APPROVED BY ARCHITECT PRIOR TO INSTALLATION.

SHEET KEYNOTES

SN.##

SN#	DESCRIPTION
SN.01	FAN COIL WITH ECONOMIZER WITH MAKE-UP AIR SQUARE DUCT
SN.02	MAKE-UP AIR DUCTWORK FROM ROOFTOP GRAVITY VENTILATOR
SN.03	EXHAUST DUCTWORK
SN.04	REPLACE SALVAGED LIGHT FIXTURE
SN.05	SUPPLY DUCTWORK HUNG FROM CEILING

SHEET KEYNOTES

DN.##

DN#	DESCRIPTION
DN.01	CEILING SUSPENDED INFRARED HEATER, STEEL HEAT SHIELD, CONTROLS, AND WIRING TO BE DEMOLISHED. EXISTING GAS PIPING TO BE CAPPED AND ABANDONED IN PLACE.
DN.02	DEMOLISH EXISTING DUCTWORK AT CEILING.
DN.03	DEMOLISH EXISTING SUPPLY AIR DUCTWORK
DN.04	GIRDER-MOUNTED BASKETBALL HOOPS TO REMAIN
DN.05	CEILING-HUNG LIGHT FIXTURE TO REMAIN, TYPICAL.
DN.06	DEMOLISH CEILING-HUNG LIGHT FIXTURE
DN.07	REMOVE AND SALVAGE CEILING-HUNG LIGHT FIXTURE

LEGEND

	(E) 12" SQUARE GLUE-ON TILES OVER 5/8" GYPSUM BOARD CEILING
	(E) CEILING-HUNG LIGHT FIXTURE
	DIFFUSER
	AREA N.I.C.
X'-X"	INDICATES HEIGHT OF CEILING ABOVE FINISH FLOOR

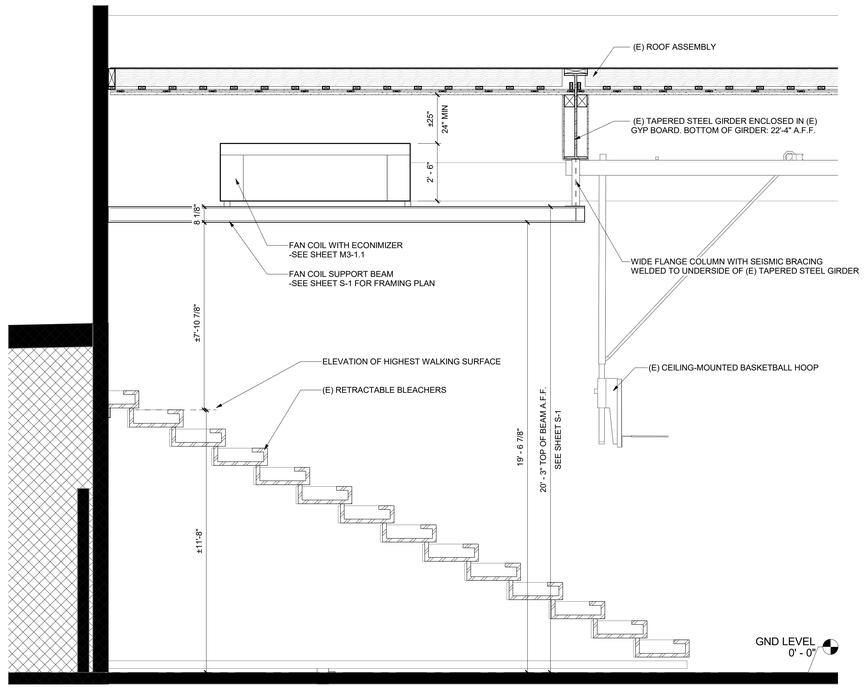

SECTION A | A | 3/8" = 1'-0"

IDENTIFICATION STAMP
DIV. OF THE STATE ARCHITECT
APP: 03-125539 INC:
REVIEWED FOR
SS ☑ FLS ☑ ACS ☐
DATE: 03/27/2026

WESTGROUP DESIGNS
19900 MacArthur Boulevard I Suite 1000
Irvine I California I 92612
949.250.0880 I FAX 949.250.0882
www.westgroupdesigns.com

FILLMORE MIDDLE SCHOOL - BUILDING F - GYM - HVAC REPLACEMENT

FILLMORE UNIFIED SCHOOL DISTRICT
543 A St, Fillmore, CA 93015

ISSUED FOR:

REVISIONS:

REGISTRATION/SIGNATURE:

LICENSED ARCHITECT
SHANE JAMES
C32284
03/10/26
Renewal Date
STATE OF CALIFORNIA

SHEET TITLE:
CEILING PLAN - DEMOLITION AND IMPROVEMENT

SHEET NUMBER:
A-2.1

WD PROJ. #	DRAWN BY:	CHECKED	DATE
25817	Author	Checker	09/10/25

© WESTGROUP DESIGNS, INC.

GENERAL NOTES

1. ALL MATERIALS, WORKMANSHIP, DESIGN, AND CONSTRUCTION SHALL CONFORM TO THE DRAWINGS SPECIFICATIONS AND THE CALIFORNIA BUILDING CODE, 2022 EDITION.
2. ALL DETAILS AND NOTES ON DRAWINGS ARE INTENDED TO BE TYPICAL AND SHALL APPLY TO SIMILAR SITUATIONS ELSEWHERE UNLESS NOTED OR SHOWN OTHERWISE.
3. CONSTRUCTION NOT SPECIFICALLY SHOWN SHALL BE ACCOMPLISHED PER MINIMUM REQUIREMENTS OF THE CALIFORNIA BUILDING CODE.
4. THIS OFFICE WILL FURNISH ANY CLARIFICATION DEEMI AT THE REQUEST OF THE CONTRACTOR. CONTRACTOR SHALL COMPARE ALL DIMENSIONS AND CONDITIONS ON CONTRACT DOCUMENTS AND AT THE SITE. ANY OMISSION OR CONFLICT SHALL BE BROUGHT TO THE ATTENTION OF THE ARCHITECT AND/OR ENGINEER. IN CASE OF ANY CONFLICT, FOLLOW THE MOST STRINGENT REQUIREMENT AS DIRECTED BY ARCHITECT AND/OR ENGINEER.
5. CONTRACTOR SHALL COORDINATE WITH ALL TRADES ALL ITEMS THAT ARE TO BE INTEGRATED INTO THE STRUCTURAL SYSTEM. ORDER OF CONSTRUCTION TO BE RESPONSIBILITY OF THE CONTRACTOR. HE SHALL PROVIDE ALL ITEMS NECESSARY FOR HIS CHOSEN PROCEDURE. CONTRACTOR SHALL BE RESPONSIBLE FOR ALL REQUIRED SAFETY PRECAUTIONS AND THE METHODS, TECHNIQUES, SEQUENCES OR PROCEDURES REQUIRED TO PERFORM HIS WORK UNTIL ALL PERMANENT MEMBERS, INCLUDING WALLS, SLABS, FLOORS AND ROOF ARE IN PLACE, AND ALL CONNECTIONS ARE COMPLETED. STABILITY OF STRUCTURE AND ALL PARTS THEREOF SHALL BE CONTRACTOR'S RESPONSIBILITY. HE SHALL PROVIDE ALL THE NECESSARY BRACING TO PROVIDE STABILITY.
6. CONTRACTOR SHALL PROVIDE ADEQUATE SHORING AND/OR BRACING WHERE STRUCTURE HAS NOT ATTAINED DESIGN STRENGTH.
7. CONSTRUCTION MATERIALS SHALL BE SPREAD OUT IF PLACED ON FRAMED FLOORS OR ROOF. LOAD SHALL NOT EXCEED THE DESIGN LIVE LOAD PER SQUARE FOOT. VIBRATION EFFECTS OF MECHANICAL EQUIPMENT HAVE NOT BEEN CONSIDERED BY THE STRUCTURAL ENGINEER.
8. CONTRACTOR SHALL REVIEW ALL SHOP DRAWINGS TO ASSURE THEY COMPLY WITH REQUIREMENTS OF THE CONTRACT DOCUMENTS. CONTRACTOR INITIATED CHANGES SHALL BE SUBMITTED IN WRITING TO THE ARCHITECT AND ENGINEER FOR APPROVAL PRIOR TO FABRICATION OR CONSTRUCTION. CHANGES SHOWN ON SHOP DRAWINGS WILL NOT SATISFY THIS REQUIREMENT.
9. CONTRACTOR SHALL NOTIFY THIS OFFICE OF ANY CONDITION HE FINDS WHERE, IN HIS JUDGMENT, IT WOULD BE DESIRABLE TO MODIFY THE REQUIREMENTS TO PRODUCE THE BEST RESULTS.
10. ALL INSPECTIONS TO BE IN ACCORDANCE WITH DSA-103 FORM.
11. SPECIAL INSPECTIONS TO BE IN ACCORDANCE WITH C.B.C. SECTION 1701A & DSA-103 FORM.
12. OBSERVATION VISITS TO THE SITE BY ENGINEER SHALL NOT BE CONSTRUED AS INSPECTION OR APPROVAL OF CONSTRUCTION.
13. CONTRACTOR SHALL REFER TO ARCHITECTURAL PLANS FOR WALL AND SLAB OPENINGS, ARCHITECTURAL TREATMENT, AND DIMENSIONS NOT SHOWN. CONSULT MECHANICAL AND ELECTRICAL PLANS FOR SIZES AND LOCATIONS OF ALL OPENINGS FOR DUCTS, PIPES, ETC. NOT SHOWN.
14. ALL WORK PERFORMED ACCORDING TO THIS DRAWING SHALL BE DONE AS TO COMPLY WITH ALL THE CONDITIONS, RESTRICTIONS, CONSTRUCTION METHODS, AND SAFETY REQUIREMENTS IMPOSED BY CAL-OSHA, AND THE CITY AND/OR COUNTY.
15. ALL UNDERGROUND ELECTRICAL CONDUIT AND OTHER UTILITIES SHALL BE INSTALLED, VERIFIED, AND APPROVED PRIOR TO PLACING CONCRETE.
16. SHOP DRAWINGS:
    a. REVIEW SHOP DRAWINGS BEFORE SUBMITTING TO THE ARCHITECT OR ENGINEER.
    b. ATTAIN SHOP DRAWING APPROVAL BEFORE BEGINNING FABRICATION.
    c. SHOP DRAWINGS ARE MEANT TO DEMONSTRATE UNDERSTANDING OF THE DESIGN CONCEPT AND STRUCTURAL CONFIGURATION. INFORMATION RELIEVED ON SHOP DRAWINGS DOES NOT CONSTITUTE AUTHORIZATION FOR CHANGE ORDERS.

FOUNDATION

1. THE CONTRACTOR SHALL TAKE ALL NECESSARY MEASURES TO FULLY PROTECT ADJACENT PROPERTIES.
2. PIPES AND CONDUITS MIGHT EXTEND UNDER CONTINUOUS WALL FOOTING GRADE BEAMS ETC., PER DETAIL 2/---.
3. ALL FOOTINGS TO REST ON UNDISTURBED FIRM SOIL OR COMPACTED CERTIFIED FILL.
4. REMOVE ALL ORGANIC MATERIAL BELOW FOOTING LOCATIONS AND SLABS. TOP OF CONCRETE SLAB SHALL BE A MINIMUM OF 8" ABOVE FINISH GRADE AT PERIMETER OF BUILDING WITH WOOD WALL CONSTRUCTION.
5. DESIGN OF FOOTINGS IS BASED ON 1500 PSF ALLOWABLE SOIL BEARING PER C.B.C. 2022, TABLE 1806A.2 PRESUMPTIVE LOAD BEARING VALUES.

CONCRETE

1. ALL CEMENT SHALL CONFIRM TO A.S.T.M. C-150, TYPE V.
2. ALL AGGREGATE SHALL CONFORM TO A.S.T.M. C-33. SHRINKAGE SHALL BE PER A.S.T.M. C-157 WITH THE AVERAGE DRYING SHRINKAGE AT 28 DAYS NOT TO EXCEED 0.05%. AGGREGATE SHALL BE NONREACTIVE WHEN TESTED FOR ALKALI REACTIVITY AS DETERMINED BY THE METHODS IN ASTM C33 APPENDIX XI.
3. DRYPACK SHALL BE COMPOSED OF ONE PART PORTLAND CEMENT TO NOT MORE THAN THREE PARTS SAND.

   CONTINUOUS FOOTINGS AND PADS.....f'c=4,500 psi* W/C 0.45
   SLAB ON GRADE.....f'c=4,500 psi* W/C 0.45

* ALL CONCRETE SHALL REACH MINIMUM COMPREHENSIVE STRENGTH AT 28 DAYS AND SHALL HAVE A MINIMUM CEMENT CONTENT OF 5 SACKS PER CUBIC YARD AND MAX. SLUMP = 4". MAXIMUM SIZE AGGREGATE = 1". MIXING AND PLACING OF ALL CONCRETE AND SELECTION OF MATERIAL TO BE IN ACCORDANCE WITH 2022 C.B.C. SECTIONS 1903A, 1904A, 1905A, 1906A, AND ACI CODE 318-19.

4. USE NO CALCIUM CHLORIDE. CONCRETE SHALL BE PLACED IN LAYERS NOT OVER 12 INCHES DEEP.
5. USE MECHANICAL VIBRATORS TO THOROUGHLY COMPACT ALL CONCRETE.
6. VIBRATORS SHALL MAINTAIN A SPEED OF NOT LESS THAN 7000 IMPULSES PER MINUTE WHEN SUBMERGED IN THE CONCRETE. PERFORM INTERNAL VIBRATION BY DIRECT ACTION IN THE CONCRETE AND NOT AGAINST FORMS OR REINFORCEMENT. VIBRATE EACH POUR UNTIL THE WATER SHOWS INDICATIONS OF RISING, BUT NOT UNTIL THE WATER HAS RISEN. VIBRATORS SHALL BE APPLIED AT UNIFORMLY SPACED POINTS NOT APART THAN THE VISIBLE EFFECTIVENESS OF THE MACHINE.
7. ALL EXPOSED EDGES OF CONCRETE SHALL HAVE 3/4" CHAMFER.
8. SUBMIT FOR REVIEW MIX DESIGN CERTIFIED (SIGNED AND STAMPED) BY A CURRENT CALIFORNIA LICENSED CIVIL ENGINEER

REINFORCING BARS

1. ALL REINFORCING SHALL BE A.S.T.M. A-615-40 FOR #4 BARS AND SMALLER.
2. ALL REINFORCING SHALL BE A.S.T.M. A-615-60 FOR #5 BARS AND LARGER.
3. ALL BARS SHALL BE DETORNADO AS PER A.S.T.M. A-305. ALL BENDS SHALL BE MADE COLD.
4. ALL BARS SHALL BE CLEAN OF LOOSE FLAKY RUST, GREASE OR OTHER MATERIALS LIKELY TO IMPAIR BOND.
5. WELDED WIRE FABRIC TO BE A.S.T.M. A-185 LAP 1-1/2 SPACES, 9" MIN.
6. ALL REINFORCING BARS SHALL BE ACCURATELY AND SECURELY PLACED BEFORE POURING CONCRETE, OR GROUTING MASONRY.
7. CONCRETE PROTECTION FOR REINFORCEMENT SHALL BE AT LEAST EQUAL TO THE DIAMETER OF THE BARS.
8. COVER SHALL BE AS FOLLOWS (UNLESS OTHERWISE NOTED):
   A. POURED AGAINST EARTH AND PERMANENTLY EXPOSED TO EARTH.....3"
   B. POURED AGAINST FORM BELOW GRADE.....2"
   C. EXPOSED TO WEATHER #5 AND SMALLER .....1 ½" LARGER BARS 2"
   D. INTERIOR SLABS ON GRADES (FROM TOP OF SLAB).....1"
9. ALL HORIZONTAL REINFORCEMENT SHALL HAVE MATCHING DOWELS AT CORNERS OF THE WALLS.
10. ALL VERTICAL REINFORCEMENT SHALL HAVE MATCHING DOWELS TO FOOTING. REINFORCING STEEL SHALL EXTEND MINIMUM OF 24" AROUND ALL CORNERS AND INTO INTERSECTIONS.
11. ALL REINFORCEMENT SHALL BE SUPPORTED BY CHAIRS OR CONCRETE.
12. ALL REINFORCING STEEL WELDING REQUIRES CONTINUOUS INSPECTION BY A AWC-CWI QUALIFIED WELDING INSPECTOR.
13. WELDING OF REINFORCING STEEL SHALL BE PERFORMED USING LOW HYDROGEN ELECTRODES, AND IN ACCORDANCE WITH AWS D1.4, REINFORCING STEEL WELDING CODE.
14. NO BARS PARTIALLY EMBEDDED IN HARDENED CONCRETE SHALL BE FIELD BENT UNLESS SPECIFICALLY SO DETAILED OR APPROVED BY THE ENGINEER.

NAILING SCHEDULE

TO SUPPORTS	3– 8d TOENAILED
AT LAPS (12" MIN.)	4– 16d FACE NAILED
BRIDGING TO JOIST	2– 8d TOENAILED EACH END
JOISTS TO SILL OR GIRDER	3– 8d TOENAILED

STUDS:

TOENAILED TO PLATE	4– 8d END NAILED
TO PLATE	2–16d
DOUBLE STUDS	16d @ 12" O.C., STAGGERED

PLATES:

UPPER TO LOWER	16d @ 12" O.C., STAGGERED
AT SPLICES	8–16d FACE NAILED (U.N.O.) WITH MIN. 48" LAP (U.N.O.)
PLATE LAP AT CORNERS	2–16d FACE
NAILED SOLE PLATE TO JOIST OR BLOCKING	16d FACE NAILED AT 8" O.C.
1" BRACE TO STUD AND PLATES	2– 8d FACE NAILED NAIL
AL MULTI JOIST BEAMS TOGETHER WITH 16d SPIKES AT 12" O.C. STAGGERED.	

STRUCTURAL HARDWARE & ACCESORIES

1. FABRICATED ACCESSORIES SHALL BE IN COMPLIANCE WITH THE SECTION STRUCTURAL STEEL
2. THE INSTALLATION OF DRILLED IN DOWELS AND BOLTS, SHALL BE INSTALLED AND INSPECTED PER CBC 1910.5
3. METAL CONNECTORS FOR WOOD CONSTRUCTION SHALL BE SIMPSON "STRONG-TIE PRODUCTS, INCACT PRODUCTS OR OTHER LISTED MAKE, APPROVED DSA. UNLESS NOTED OTHERWISE. PRODUCT CALL OUT ON PLANS REFERS TO SIMPSON "STRONG-TIE" MODEL NUMBERS AND KC METALS REFERENCE NUMBERS. APPROVED EQUALS MAY ONLY BE USED WITH PRIOR APPROVAL FROM DSA AND THE STRUCTURAL ENGINEER. CONTACT SIMPSON "STRONG-TIE" AND INCACT (KC METALS EXCLUSIVE DISTRIBUTOR) FOR TECHNICAL INFORMATION REGARDING THE SPECIFIED PRODUCTS AND AVAILABILITY.

"SIMPSON "STRONG-TIE"	"INCACT, LLC"
WWW.STRONGTIE.COM	(KC METALS EXCLUSIVE DISTRIBUTOR)
(800) 999-5099	(888) 397-9770

4. ALL HARDWARE AND ACCESSORIES TO BE OF HOT DIP GALVANIZED.

LOADING

1. LIVE LOADS:
   a. ROOF - - - - 20 PSF REDUCIBLE
3. WIND LOADS:
   a. BASIC WIND SPEED = 100 MPH
   b. RISK CATEGORY = II
   c. IMPORTANCE FACTOR = 1
   d. WIND EXPOSURE = C
   e. INTERNAL PRESSURE COEFFICIENT (GCpi = 0.18 (NOT APPLICABLE)
   f. COMPONENT AND CLADDING N/A
2. SEISMIC LOADS: NON STRUCTURAL COMPONENTS
   a. NON STRUCTURAL IMPORTANCE FACTOR = I_p=1
   b. EXISTING BUILDING IMPORTANCE FACTOR = 1.25
   c. EXISTING BUILDING RISK CATEGORY = III
   d. MAPPED SPECTRAL RESPONSE ACCELERATION, S_{DS}=0.311, S_{D1}=1.846 SITE CLASS = D (DEFAULT)
   e. SPECTRAL RESPONSE COEFFICIENTS, S_{DS}=1.541, S_{D1}=1.231, S_{S}=0.724, S_{1}=1.926

   BUILDING BASIC SEISMIC FORCE RESISTING SYSTEM: EXISTING PRECAST CONCRETE SHEAR PANEL

ABBREVIATION

A.F.F.	ABOVE FINISH FLOOR	C/J	CEILING JOIST	D.F.	DOUGLAS FIR	HGR.	HANGER
BM.	BEAM	C.J.	CONTROL JOINT	DP.	DROP		TRUSS JOIST MACMILLAN M-I
BD.	BOARD	CLG.	CEILING	F/J	FLOOR JOIST		1.9E MICROLAM PARALLAM
BOT.	BOTTOM	COL.	COLUMN	FL.	FLUSH	O.C.	ON CENTER
C	CAMBER	CONT.	CONTINUOUS	G.L.	GLUE LAM	PCF	POUND PER CUBIC FT.
C/C	CENTER TO CENTER	CMU	CONCRETE MASONRY UNIT	T.	GIRDER TRUSS	P.T.	PRESSURE TREATED
CANT.	CANTILEVER	DBL.	DOUBLE	HDR.	HEADER	PSI.	2.0E, 2900Fb PSI.
R/J	ROOF JOISTS						
R/R	ROOF RAFTERS						
S.S.	SELECT STRUCTURE						
SHT'G	SHEATHING						
TRM.	TRIMMER						
TYP.	TYPICAL						
U.N.O.	UNLESS NOTED OTHERWISE						

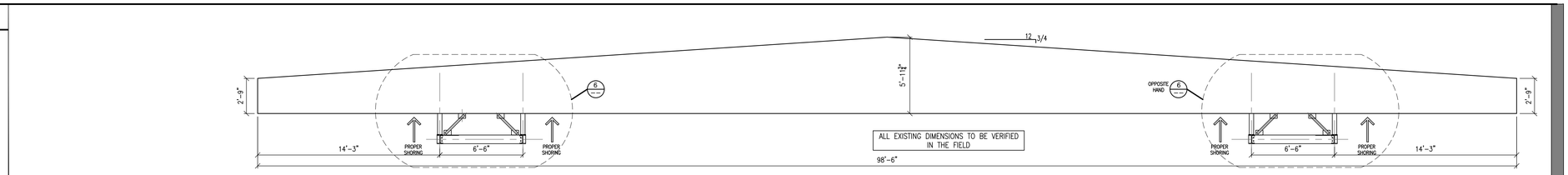

(E) STEEL ROOF TAPERED GIRDER PROFILE — SCALE 1/4"=1'-0" — 5

SAWN LUMBER

WEST COAST DOUGLAS FIR LARGH 19% MAXIMUM MOISTURE CONTENT.
JOISTS....NO. 2 (FB=900 PSI) NO. 1 (FB=1000 PSI)
BEAMS AND HEADERS.....NO. 2 (4" WIDTH FB=900 PSI)
BEAMS AND HEADERS.....NO. 1 (6" WIDTH AND GREATER FB=1350 PSI)
STUDS AND PLATES (2X6).....STUD OR BETTER (FB= 700PSI)
POSTS (4X4 AND LARGER)....NO. 1 (FB=1000 PSI)
SILL PLATES ON CONCRETE AND MASONRY SHALL BE DOUGLAS FIR (GROUP 3 LUMBER) PRESSURE TREATED WITH AN APPROVED PRESERVATIVE OR SHALL BE DURABLE WOOD (FOUNDATION GRADE CALIF. REDWOOD OR FOUNDATION LUMBER WESTERN RED CEDAR).

FIELD CUTTING ENDS, NOTCHES, AND DRILLED HOLES IN PRESERVATIVE-TREATED WOOD SHALL BE TREATED IN THE FIELD IN ACCORDANCE WITH AWPA M4.

ALL PRESSURE TREATED LUMBER MUST BE TREATED WITH SODIUM BORATE (SBX) OR CHROMATED COPPER ARSENATE (CCA-C) TO AVOID CORROSION OF HARDWARE IN CONTACT WITH TREATED LUMBER.

FASTENERS, INCLUDING NUTS AND WASHERS, AND CONNECTORS IN CONTACT WITH PRESERVATIVE-TREATED AND FIRE-RETARDANT-TREATED WOOD SHALL BE IN ACCORDANCE WITH SECTIONS 2304.10.6.1 THROUGH 2304.10.6.4. THE COATING WEIGHTS FOR ZINC-COATED FASTENERS SHALL BE IN ACCORDANCE WITH ASTM A153. STAINLESS STEEL DRIVEN FASTENERS SHALL BE IN ACCORDANCE WITH THE MATERIAL REQUIREMENTS OF ASTM F1667

ALL REQUIRED PRESSURE TREATED WOOD MUST HAVE THE PROPER IDENTIFICATION PER THE FOLLOWING.

WOOD TO BE PRESERVATIVE TREATED SHALL BEAR THE QUALITY MARK OF AN INSPECTION AGENCY THAT MAINTAINS CONTINUING SUPERVISION, TESTING AND INSPECTION OVER THE QUALITY OF THE PRESERVATIVE-TREATED WOOD. INSPECTION AGENCIES FOR PRE-SERVATIVE TREATED WOOD SHALL BE LISTED BY AN ACCREDITATION BODY THAT COMPLIES WITH THE REQUIREMENTS OF THE AMERICAN LUMBER STANDARDS TREATED WOOD PROGRAM, OR EQUIVALENT. THE QUALITY MARK SHALL BE ON A STAMP OR LABEL AFFIXED TO THE PRESERVATIVE-TREATED WOOD, AND SHALL INCLUDE THE FOLLOWING INFORMATION:

1. IDENTIFICATION OF TREATING MANUFACTURER.
2. TYPE OF PRESERVATIVE USED.
3. MINIMUM PRESERVATIVE RETENTION (PCF POND CUBIC FOOT).
4. END USE FOR WHICH THE PRODUCT IS TREATED.
5. AWPA STANDARD TO WHICH THE PRODUCT WAS TREATED.
6. IDENTITY OF THE ACCREDITED INSPECTION AGENCY.

FASTENERS, INCLUDING NUTS AND WASHERS, IN CONTACT WITH PRESERVATIVE-TREATED WOOD SHALL BE OF HOT-DIPPED ZINC-COATED GALVANIZED STEEL, STAINLESS STEEL, SILICON BRONZE OR COPPER. STAPLES SHALL BE OF STAINLESS STEEL.
FASTENERS OTHER THAN NAILS, STAPLES, TIMBER RIVETS, WOOD SCREWS AND LAG SCREWS SHALL BE PERMITTED TO BE OF MECHANICALLY DEPOSITED ZINC-COATED STEEL WITH COATING WEIGHTS IN ACCORDANCE WITH ASTM B695, CLASS 55 MINIMUM.

CONNECTORS THAT ARE USED IN EXTERIOR APPLICATIONS AND IN CONTACT WITH PRESERVATIVE-TREATED WOOD SHALL HAVE COATING TYPES AND WEIGHTS IN ACCORDANCE WITH THE TREATED WOOD OR CONNECTOR MANUFACTURER'S RECOMMENDATIONS. IN THE ABSENCE OF MANUFACTURER'S RECOMMENDATIONS, NOT LESS THAN ASTM A653, TYPE G185 ZINC-COATED GALVANIZED STEEL, OR EQUIVALENT, SHALL BE USED.

EXCEPTION: PLAIN CARBON STEEL FASTENERS, INCLUDING NUTS AND WASHERS, IN SBX/DOT AND ZINC BORATE PRESERVATIVE-TREATED WOOD IN AN INTERIOR, DRY ENVIRONMENT SHALL BE PERMITTED.

NAILS MUST CONFORM TO THE REQUIREMENTS OF ASTM F1667, INCLUDING SUPPLEMENT 1. NAILS USED FOR FRAMING AND SHEATHING CONNECTIONS SHALL HAVE MINIMUM AVERAGE BENDING YELD STRENGTH AS FOLLOWS:
80 KSI FOR SHANK DIAM LARGER THAN 0.177 INCH BUT NOT LARGER THAN 0.254 INCH
90 KSI FOR SHANK DIAM LARGER THAN 0.142 INCH BUT NOT LARGER THAN 0.177 INCH
100 KSI FOR SHANK DIAM LARGER THAN 0.099 INCH BUT NOT LARGER THAN 0.142 INCH

BOLTS MUST BE FULL BODY DIAMETER PER AMERICAN SOCIETY OF MECHANICAL ENGINEERS (ASME) B18.2.1 PER IR 23-5.

WOOD STRUCTURAL PANELS MUST CONFORM TO DOC PS 1.
PANELS MUST BE MARKED WITH GRADE, BOND CLASSIFICATION, AND PERFORMANCE CATEGORY.
EXTERIOR-TYPE PANELS ARE REQUIRED WHERE PERMANENTLY EXPOSED.
EXPOSURE 1 IS ALLOWED FOR ROOF SHEATHING UNDERSIDE.

WOOD FRAMING NOTES

1. MINIMUM NAILING, UNLESS OTHERWISE NOTED, SHALL CONFORM TO TABLE 2304.10.2 OF THE CALIFORNIA BUILDING CODE.
2. BOLTS IN TIMBER TO HAVE STANDARD WASHERS UNLO. BOLT HOLES TO BE 1/16" LARGER THAN BOLT DIAMETER. NO LARGER HOLES PERMITTED.
3. STUDS IN EXTERIOR WALLS OR INTERIOR BEARING PARTITIONS SHALL BE CUT OR NOTCHED NO MORE THAN 25% OF THEIR WIDTH. INTERIOR NON-BEARING PARTITIONS SUPPORTING NO LOADS OTHER THAN THE PARTITION OWN WEIGHT MAY BE NOTCHED 40% OF THEIR WIDTH.
4. BORED HOLES IN ANY STUD SHALL BE LIMITED TO 40% OF THEIR WIDTH AND SHALL BE LOCATED AT LEAST 5/8-INCH FROM THE EDGE OF THE STUD.

STRUCTURAL STEEL

1. FABRICATION AND ERECTION OF STRUCTURAL STEEL SHALL BE IN ACCORDANCE WITH SPECIFICATION FOR THE DESIGN, "FABRICATION AND ERECTION OF STRUCTURAL STEEL FOR BUILDINGS," A.I.S.C., CURRENT EDITION.
   A: STEEL WIDE FLANGE SECTIONS TO CONFORM TO ASTM A572 OR A992, GRADE 50,
   B: PLATES, ANGLES, AND RODS TO CONFORM TO ASTM A36 (U.N.O.)
   C: TUBE SECTIONS TO CONFORM TO ASTM A-500, GRADE B.
   D: PIPES TO CONFORM TO ASTM A-500, GRADE B.
   E: ANCHOR BOLTS EMBEDDED IN CONCRETE SHALL CONFORM TO F1554 CR. 36 (U.N.O)
   F: CONNECTION BOLTS 7/8" (UNO) SHALL CONFORM TO ASTM A307 (U.N.O.)
2. ALL WELDING SHALL BE PERFORMED BY CERTIFIED WELDERS, AT LICENSED SHOP AND APPROVED BY THE BUILDING DEPARTMENT. USE ONLY THE ELECTRIC SHIELDED ARC PROCESS WITH LOW HYDROGEN E70XX ELECTRODES, PER THE LATEST EDITION OF STRUCTURAL WELDING CODE-STEEL, ANSI/AWS D1.1-2015. ALL BACKUP BARS SHALL BE REMOVED AFTER WELDING. PREHEAT THE METALS TO BE WELDED. NO SLAG WELDING. CONTINUOUS INSPECTION BY A AWS-CWI QUALIFIED WELDING INSPECTOR IS REQUIRED FOR ALL FIELD WELDINGS.
3. PROVIDE STANDARD WASHERS UNDER ALL NUTS MEETING ASTM F436 --STANDARD SPECIFICATION FOR HARDENED STEEL WASHERS
4. BOLTS: ASTM F3125 GRADE A325 AND ASTM F3125 GRADE A490
5. NUTS: ASTM A563 – STANDARD SPECIFICATION FOR CARBON AND ALLOY STEEL NUTS
   BOLT F3125 GRADE A325, NUT TO MEET ASTM A563 GRADE C (DR DH)
   BOLT F3125 GRADE A490, NUT TO MEET ASTM A563 GRADE DH
6. ALL STEEL EXPOSED TO WEATHER SHALL BE HOT DIP GALVANIZED AFTER FABRICATION, OR OTHER APPROVED WEATHER PROOFING METHOD.
7. WHERE FINISH IS ATTACHED TO STRUCTURAL STEEL PROVIDE 1/2" BOLT HOLES AT 24"O.C. FOR ATTACHMENT OF NAILERS, UNLESS NOTED OTHERWISE. NELSON STUDS 1/2" X 3" (COMPLETE STUD ASSEMBLY COMPLETE WITH ITS FERRULE) MAY BE USED TO REPLACE BOLTS.
8. PROVIDE SPECIAL DEPUTY INSPECTOR DURING INSTALLATION OF ALL HIGH STRENGTH BOLTS.
9. ALL STRUCTURAL STEEL TO BE SHOP PRIME WITH "GRAY" RUSTOLEUM
10. DO NOT PRIME OR PAINT CONCRETE EMBEDED PORTION OF STEEL SECTIONS.
11. USE NOTCH TOUGH FILLER METAL HAVING A MINIMUM CHARPY V-NOTCH TOUGHNESS OF 20 FT. LBS. AT -20 DEG. F FOR ALL WELDS IN THE BRACES AND MOMENT CONNECTIONS.
12. THE USE OF ROLLED STEEL SECTIONS AND / OR BOLTS MANUFACTURED OUTSIDE THE UNITED STATES WILL REQUIRE VERIFICATION THAT THE PRODUCTS COMPLY WITH APPLICABLE ASTM STANDARDS. MILL CERTIFICATES WILL BE REQUIRED FOR ALL STEEL. STEEL GRADES OTHER THAN ASTM– A36 WILL REQUIRE TESTING BY AN APPROVED LABORATORY. ALL FOREIGN BOLTS MUST BE APPROVED BY DSA PRIOR TO THEIR USE.

POST INSTALLED ANCHOR TESTING & FREQUENCY

1. POST-INSTALLED ANCHORS, 50 PERCENT OR ALTERNATE BOLTS IN A GROUP, INCLUDING AT LEAST ONE-HALF THE ANCHORS IN EACH GROUP, SHALL BE TESTED.
2. THE MANUFACTURER'S RECOMMENDED INSTALLATION TORQUE BASED ON AN APPROVED EVALUATION REPORT USING CRITERIA ADOPTED IN THIS CODE.
3. TORQUE WRENCH METHOD:
   TORQUE-CONTROLLED POST-INSTALLED ANCHORS TESTED WITH A CALIBRATED TORQUE WRENCH SHALL ATTAIN THE SPECIFIED TORQUE WITHIN 1/2 TURN OF THE NUT; OR ONE-QUARTER (1/4) TURN OF THE NUT FOR A 3/8 INCH SLEEVE ANCHOR ONLY.
   REQUIRED TORQUE FOR 1/2" DIAM. STAINLESS STEEL ANCHOR IS 40 FT. LBS., 50 FT. LBS. FOR CARBON STEEL AND 30 FT. LBS. FOR 3/8" DIAM. CARBON/STAINLESS STEEL ANCHOR PER TABLE 1-KC-ESR-4266.
4. CONCRETE SHALL REACH FULL STRENGTH PRIOR TO INSTALLATION OF WEDGE ANCHOR BOLTS.

EXEMPT FROM STRUCTURAL TEST/ SPECIAL INSPECTIONS

1. SHALLOW FOUNDATIONS, ETC. ARE EXEMPT FROM SPECIAL INSPECTIONS AND TESTING BY A GEOTECHNICAL ENGINEER FOR THE FOLLOWING CASES:
   A. BUILDINGS WITHOUT A GEOTECHNICAL REPORT AND MEETING THE EXCEPTION ITEM #1 CRITERIA IN CBC SECTION 1803A.2 SUPPORTED BY NATIVE SOIL (ANY EXCAVATION DEPTH) OR FILL SOIL (NOT EXCEEDING 12" DEPTH PER CBC SECTION 1804A4).
   B. SOIL SCARIFICATION/RECOMPACTION NOT EXCEEDING 12" DEPTH,
   C. NATIVE OR FILL SOIL SUPPORTING EXTERIOR NON-STRUCTURAL FLATWORK (E.G., SIDEWALKS, SITE CONCRETE RAMPS, SITE STAIRS, PARKING LOTS, DRIVEWAYS, ETC.),
   D. UNPAVED LANDSCAPING AND PLAYGROUND AREAS, OR E) UTILITY TRENCH BACKFILL WITH DEPTH NOT EXCEEDING 12".
2. EPOXY SHEAR DOWELS IN SITE FLATWORK AND/OR OTHER NON-STRUCTURAL CONCRETE.

MATERIAL TESTING REQUIREMENTS

THE REINFORCING WIRE MESH, THE PLAIN AND DEFORMED REINFORCING STEEL BARS AND THE STRUCTURAL STEEL SHAPES DELIVERED TO THE JOB SITE FOR USE IN THE CONSTRUCTION OF THE STRUCTURE MUST BE ACCOMPANIED WITH MILL CERTIFICATES, PREPARED BY AN APPROVED TESTING AGENCY, WHICH DOCUMENT THE MATERIAL STRENGTHS AND CHEMICAL COMPOSITIONS SPECIFIED FOR THE PROJECT.

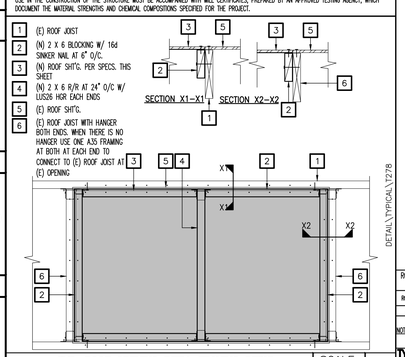

TYP. ROOF OPENING INFILL FRAMING DETAIL — SCALE NONE — 4

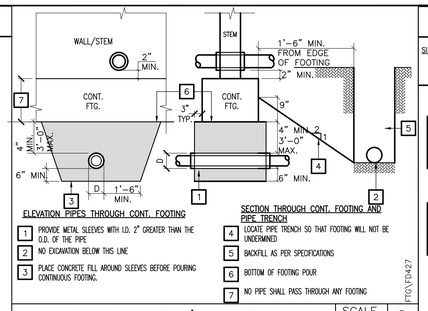

ELEVATION THROUGH CONT. FOOTING

1. PROVIDE METAL SLEEVES WITH I.D. 2" GREATER THAN THE O.D. OF THE PIPE
2. NO EXCAVATION BELOW THIS LINE
3. PLACE CONCRETE FILL AROUND SLEEVES BEFORE POURING CONTINUOUS FOOTING.

SECTION THROUGH CONT. FOOTING AND PIPE TRENCH

4. LOCATE PIPE TRENCH SO THAT FOOTING WILL NOT BE UNDERMINED
5. BACKFILL AS PER SPECIFICATIONS
6. BOTTOM OF FOOTING POUR
7. NO PIPE SHALL PASS THROUGH ANY FOOTING

TYPICAL PIPE TRENCH/FOOTING DETAIL — SCALE NONE — 2

COMMON NAILS

SIZE OF NAIL	STANDARD LENGTH (INCH)	NAIL DIAMETER (INCH)
8d	2.5	0.131
10d	3	0.148
16d	3.5	0.162

BAR	D' (IN.)	135° HOOK A' or G'	135° HOOK H	135° HOOK J
#3	1 1/2	4 1/4	3	
#4	2	4 1/2	3	
#5	2 1/2	5 1/2	3 3/4	

135' SEISMIC STIRRUP/TIE HOOK DIMENSIONS

BAR	D (IN.)	180° HOOK A or G	180° HOOK J	90° HOOK A or G
#3	2 1/4	5	3	6
#4	3	6	4	8
#5	3 3/4	7	5	10

90' & 180' HOOK DIMENSIONS

MIN. REQUIRED OVERLAP		
BAR SIZE	CONCRETE	
	TOP	BOT.
#4	27"	21"
#5	51"	39"

TOP BARS ARE HORIZONTAL BARS WITH MORE THAN 12 IN. OF FRESH CONCRETE BELOW THE SPLICE.

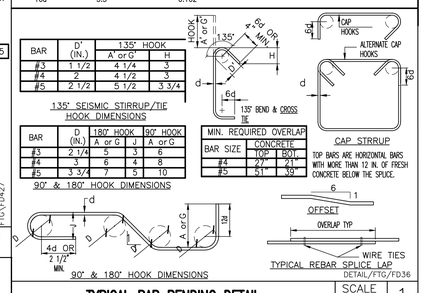

TYPICAL BAR BENDING DETAIL — SCALE NONE — 1

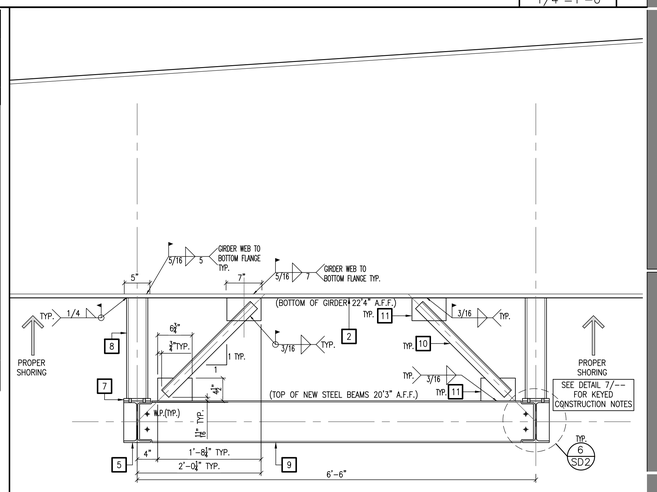

(E) STEEL ROOF TAPERED GIRDER PROFILE — SCALE 1"=1'-0" — 6

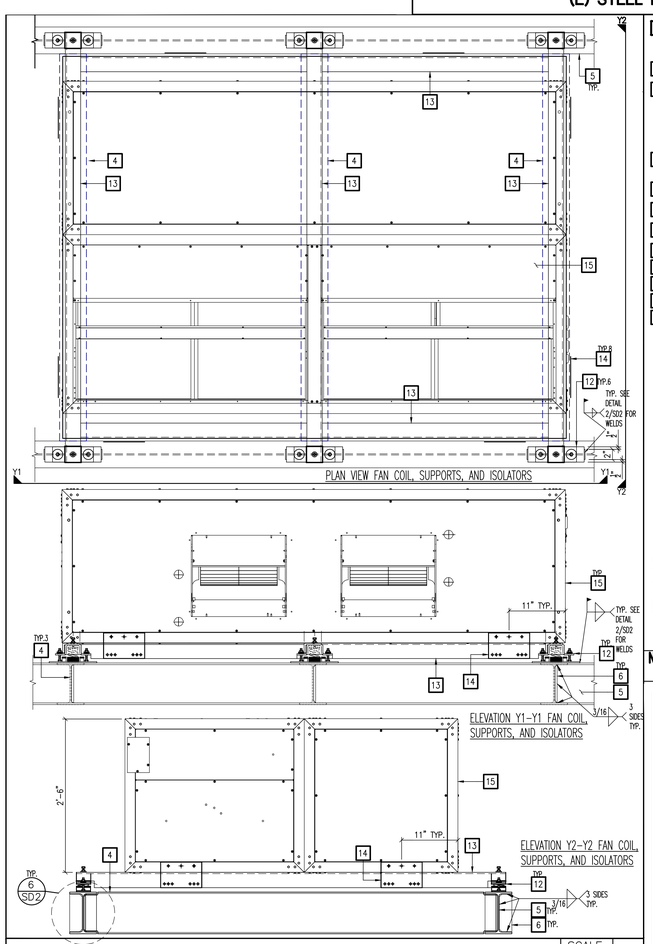

NEW 20T FAN COIL UNIT PLAN AND ELEVATION SUPPORT DETAILS — SCALE 1"=1' — 8

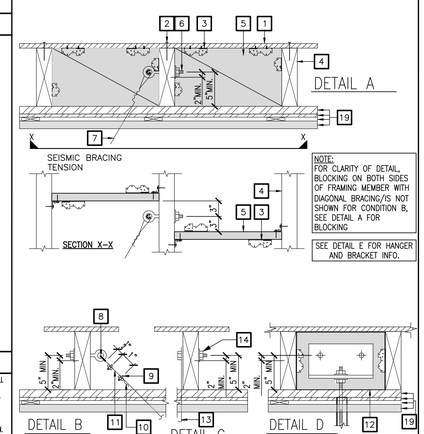
DETAIL A
SEISMIC BRACING TENSION
SECTION X–X
DETAIL B
DETAIL C
DETAIL D
DETAIL E
DETAIL F
TOP VIEW
DETAIL G
SEE DETAIL E FO

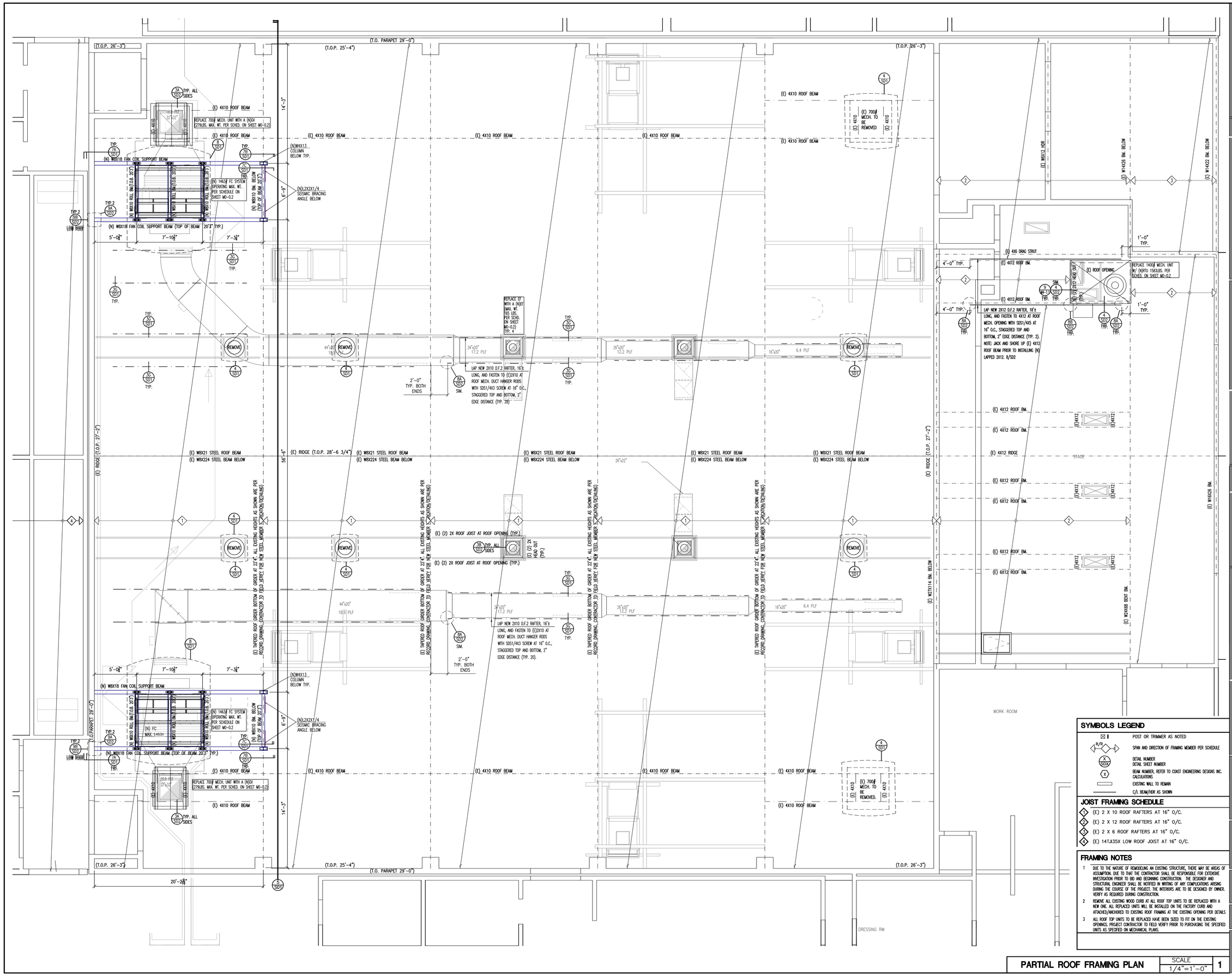

SYMBOLS LEGEND

- POST OR TRIMMER AS NOTED
- SPAN AND DIRECTION OF FRAMING MEMBER PER SCHEDULE
- DETAIL NUMBER / DETAIL SHEET NUMBER
- BEAM NUMBER, REFER TO COAST ENGINEERING DESIGNS INC. CALCULATIONS
- EXISTING WALL TO REMAIN
- C/L BEAM/HER AS SHOWN

JOIST FRAMING SCHEDULE

1. (E) 2 X 10 ROOF RAFTERS AT 16" O/C.
2. (E) 2 X 12 ROOF RAFTERS AT 16" O/C.
3. (E) 2 X 6 ROOF RAFTERS AT 16" O/C.
4. (E) 14TJI35X LOW ROOF JOIST AT 16" O/C.

FRAMING NOTES

1. DUE TO THE NATURE OF REMODELING AN EXISTING STRUCTURE, THERE MAY BE AREAS OF ASSUMPTION. DUE TO THAT THE CONTRACTOR SHALL BE RESPONSIBLE FOR EXTENSIVE INVESTIGATION PRIOR TO BID AND BEGINNING CONSTRUCTION. THE DESIGNER AND STRUCTURAL ENGINEER SHALL BE NOTIFIED IN WRITING OF ANY COMPLICATIONS ARISING DURING THE COURSE OF THE PROJECT. THE INTERIORS ARE TO BE DESIGNED BY OWNER. VERIFY AS REQUIRED DURING CONSTRUCTION.
2. REMOVE ALL EXISTING WOOD CURB AT ALL ROOF TOP UNITS TO BE REPLACED WITH A NEW ONE. ALL REPLACED UNITS WILL BE INSTALLED ON THE FACTORY CURB AND ATTACHED/ANCHORED TO EXISTING ROOF FRAMING AT THE EXISTING OPENING PER DETAILS
3. ALL ROOF TOP UNITS TO BE REPLACED HAVE BEEN SIZED TO FIT ON THE EXISTING OPEANNGS. PROJECT CONTRACTOR TO FIELD VERIFY PRIOR TO PURCHASING THE SPECIFIED UNITS AS SPECIFIED ON MECHANICAL PLANS.

PARTIAL ROOF FRAMING PLAN | SCALE 1/4"=1'-0" | 1

IDENTIFICATION STAMP
DIV. OF THE STATE ARCHITECT
APP: 03-125539 INC:
REVIEWED FOR
SS ☑ FLS ☑ ACS ☐
DATE: 03/27/2026

WESTGROUP DESIGNS
ARCHITECTURE | PLANNING | INTERIOR DESIGN
19900 MacArthur Boulevard | Suite 1000
Irvine | California | 92612
949.250.0880 | FAX 949.250.0882
www.westgroupdesigns.com

Coast Engineering Designs Inc.
Civil and Structural Engineers
1500 ADAMS AVE., SUITE 303
COSTA MESA, CA 92626
(714) 993-0533
J.N. 13-2025

FILLMORE MIDDLE SCHOOL - BUILDING F - GYM - HVAC REPLACEMENT

FILLMORE UNIFIED SCHOOL DISTRICT
543 A St, Fillmore, CA 93015

ISSUED FOR:

REVISIONS:

REGISTRATION/SIGNATURE:
REGISTERED PROFESSIONAL ENGINEER
FARIBAD NOORZAI
No. 3970
EXP. 12/31/25
CIVIL
STATE OF CALIFORNIA

2/13/2026

SHEET TITLE:

PARTIAL ROOF FRAMING PLAN

SHEET NUMBER:

S-1

WD PROJ. #	DRAWN BY:	CHECKED	DATE
25817	CEDI	CEDI	09/10/25

© WESTGROUP DESIGNS, INC.

1" = 20'
20 40 60

1. (E) 12" THICK PRECAST CONC. WALL, REINFORCED WITH #4 VERT. AT 18" O/C AND #4 HORIZ. AT 16" O/C EACH FACE
2. (E) 4X10 LEDGER WITH 7/8"ø ANCHOR BOLTS AT 24" O/C
3. (E) WALL BENT PLATE 3/8" THICK AND 3" WIDE W/(2) 3/4"ø M.B. TO JOIST AND 7/8"ø A.B. TO WALL, WALL TIE AT 48" O/C
4. (E) W HANGER AT EACH JOIST
5. (N) FAN COIL SUPPORT BEAM PER PLAN AND DETAIL 7/SD1
6. (E) 2X10 ROOF JOIST AT 16" O/C
7. (E) 10d NAILS ROOF SHT'G.
8. (N) ADDITIONAL BENT PLATE 3/8" THICK AND 3" WIDE W/(2) 3/4"ø M.B. TO JOIST AND HILTI 1"ø KWIK BOLT TZ2 – CS WITH 4.625" NOMINAL EMBEDMENT DEPTH PER ICC-ESR-4266 , HAMMER DRILL BIT INSTALLATION PER MPII (HIGH ROOF). 185 FT.-LB INSTALLATION TORQUE
9. (E) (4) #7 CHORD REINFORCING BARS
11. (E) 7/8" PLY BACKER BLK X 2'6" EACH SIDE W/(15)10d , 3 ROW EA, SIDE, CLINCH.
12. (E) WALL BENT PLATE 1/2" THICK AND 4" WIDE W/(4) 3/4"ø M.B. TO JOIST AND 3/4"ø THREADED ROD WITH NUT TO WALL INSERT AT 48" O/C WALL TIE.
13. (E) 14" TJI35X ROOF JOIST AT 16" O/C
14. (E) 4X12 LEDGER W/3/4" KWIK BOLTS A 16" O/C
15. (N) 7/8" PLY BACKER BLK X 2'6" EACH SIDE W/(15)10d , 3 ROW EA, SIDE, CLINCH.
16. (N) WALL BENT PLATE 1/2" THICK AND 4" WIDE W/(4) 3/4"ø M.B. TO JOIST AND HILTI 3/4"ø KWIK BOLT TZ2-CS WITH 5.5" NOMINAL EMBEDMENT DEPTH PER ICC-ESR-4266 , HAMMER DRILL BIT INSTALLATION PER MPII (HIGH ROOF). 110 FT.-LB INSTALLATION TORQUE TO WALL INSERT AT NEW WALL TIE.

NOTES:
1. DO NOT CUT ANY REINFORCING BARS.
2. LOCATE ALL REINFORCING BARS PRIOR TO INSTALLING ANY KWIK BOLT.

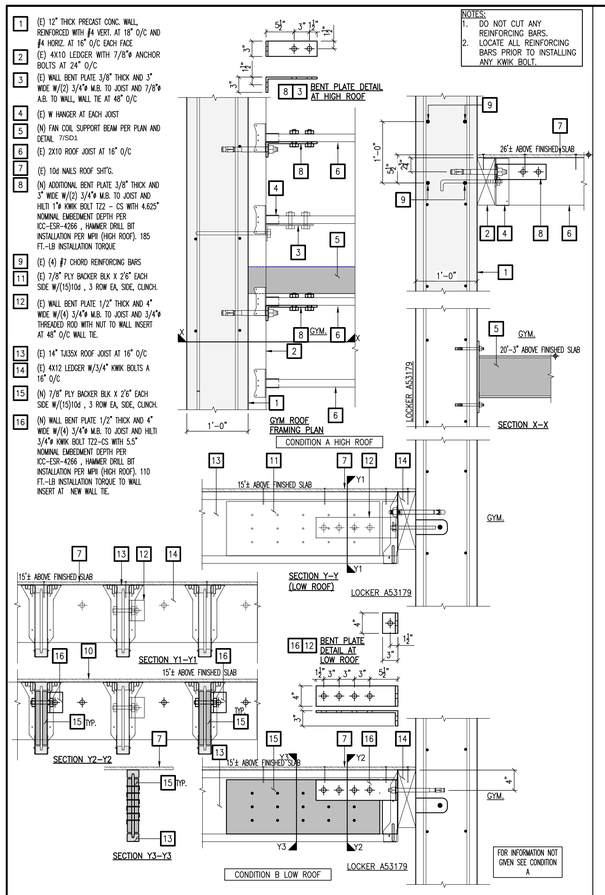

NEW LOW AND HIGH ROOF WALL TIE DETAIL AT NEW F/C SUPPORT BM

SCALE NONE | 9

1. EQUIPMENT CONCRETE PAD WITH #5 BARS AT 12" O/C BOTH WAYS TOP AND BOTTOM WITH 90° HOOK
2. MECHANICAL UNIT PER SCHEDULES ON SHEETS M0-0.2. SEE SHEET M3-1.1 FOR LOCATION OF MECHANICAL UNIT.
3. 1/2"ø KB-TZ2 HILTI KWIK BOLT W/ 3 3/4" NOMINAL EMBEDMENT, STAINLESS STEEL 316, 40 FT. POUNDS TORQUE (ICC-ESR-4266)
4. 3/4" CHAMFER AT ALL EXPOSED CONCRETE EDGES
5. 6" U.N.O. PER ARCH., MECHANICAL & ELECTRICAL PLANS
6. 4"X4"X3/16"X0'-6" LONG GALV. ANGLE WHEN THE MECHANICAL UNIT IS NOT EQUIPPED WITH PRE ATTACHMENT CONNECTION POINT
7. 12-14 X 3/4" (HWH, CLIMASEAL), ITW TEKS SELF DRILLING TAPPING SCREW, STAGGERED (ICC-ESR 1976)
8. MECHANICAL UNIT BASE FRAME
9. SLAB ON GRADE PER ARCH. PLANS AND DETAIL 7/--
10. 1/2" POSITIVE FELT SEPARATION WITH SIKAFLEX 2-C "GRAY" COLOR ELASTIC JOINT FILLER
12. (E) SLAB ON GRADE PER ARCH. PLANS
13. SAWCUT LINE PER 2/A1.1

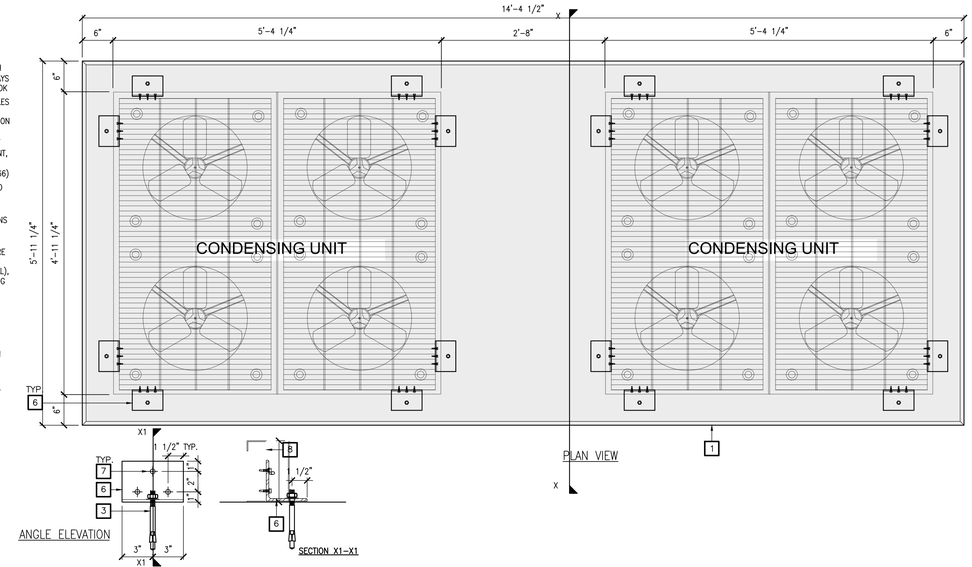

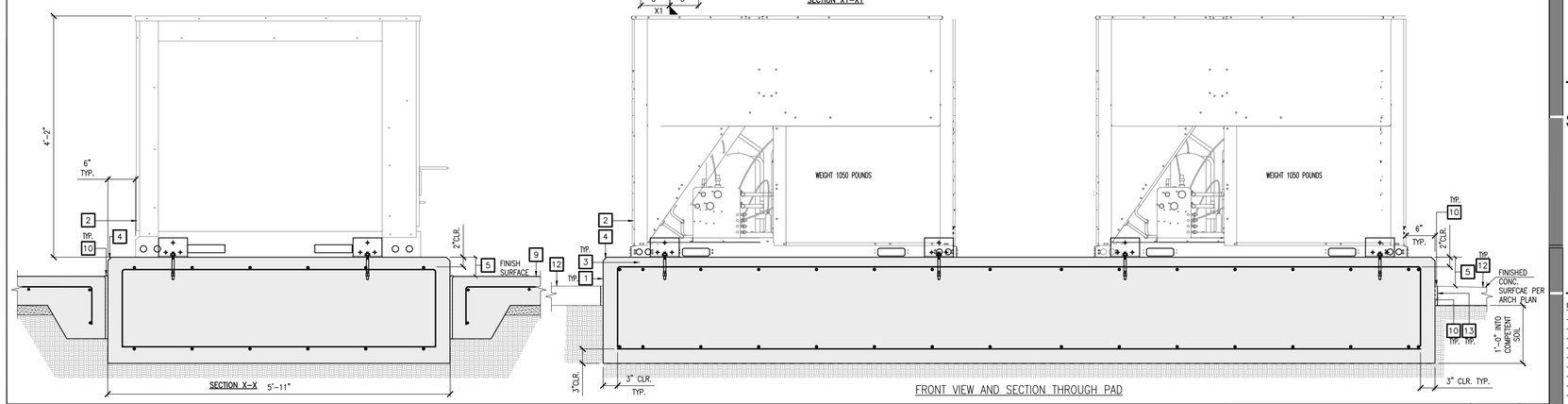

OUTDOOR CONDENSING UNIT FOUNDATION AND ANCHORAGE INSTALLATION DETAIL (VERIFY UNIT DIMENSIONS WITH MECHANICAL PLANS)

SCALE 1"=1' | 1

1. (E) SHT'G.
2. (E) 4X BEAM PER PLAN
3. (E) ROOF JOIST PER PLAN IN HANGER
4. (E) (2) 2 X JOIST PER PLAN IN HANGER
5. (N) 2X LAP BEAM PER PLAN
6. FASTEN TO 4X AT ROOF WITH SDS1/4X5 AT 16" O.C., STAGGERED TOP AND BOTTOM, 2" EDGE DISTANCE
7. (6)SDS1/4X5 SCREWS AS SHOWN AT (N) 2X LAP JOIST AT ENDS
8. (3)SDS1/4X5 SCREWS AS SHOWN BOTH SIDES OF (E) JOIST HANGER SUPPORT JOISTS
9. (E) HANGER BEYOND

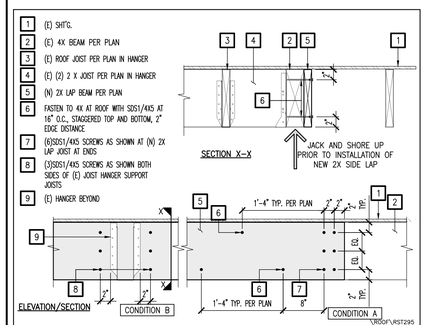

STRENGTHENING ROOF BEAM AT RTU

SCALE NONE | 8

1. N) RTU UNIT TO REPLACE EXISTING PER ROOF AND MECHANICAL PLANS. SEE DETAIL 11/M4-1.1 FOR UNIT ATTACHMENT TO THE FACTORY CURB.
2. (N) 12 GA. FACTORY CURB PER DETAIL-1 AND DETAIL-2 SHOWN ON 9/M4-1.1
3. (N) 3/8"X4" LAG SCREWS, 3 PER SIDE OF FACTORY CURB IN 7/16"ø HOLE AS SHOWN ON DETAIL-1 9/M4-1.1
4. (E) PLYWOOD ROOF SHT'G
5. (E) STEEL GIRDER WITH TOP FLANGE NAILER BEYOND
6. (E) 4X BEAM WITH TOP FLANGE W412 HGR.
7. (N) 2X LAPPED JOIST PER PLAN
8. (N) SDS 1/4 X 5 SCREW STAGGERED TOP AND BOTTOM PER PLAN

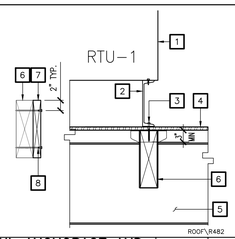

RTU-1 CURB DETAIL ANCHORAGE AND ROOF BEAM STRENGTHEN DETAIL

SCALE NONE | 4

1. (N) UNIT TO REPLACE (E) PER ROOF AND MECHANICAL PLANS
2. (N) TAPERED PRE-FAB CURB PER MECH PLANS
3. (N) SDS 1/4 X4" SCREW LOCATE AT ℄ OF (E) 2X. (3) SCREWS PER SIDE WITH 8" SPACING BETWEEN SCREWS.
4. (E) ROOF SHT'G
5. (E) 4X FULL ROOF TOP UNIT SUPPORT PER PLAN
6. (E) U-HANGER OR INSTALL (N) (2)A35 FRAMING ANCHOR ONE PER SIDE AND STAGGERED AT BOTH ENDS
7. (E) 4X ROOF TOP SUPPORT BEAM PER PLAN IN FOREGROUND
8. (E) (2)2X ROOF JOISTS PER ROOF PLAN
9. (N) SDS 1/4 X4" SCREW LOCATE AS SHOWN. (3) SCREWS PER SIDE WITH 15" SPACING BETWEEN SCREWS.
10. SEE MECHANICAL DETAILS 1 AND 10 ON SHEET M4-1.1 FOR CONNECTION OF EXHAUST FAN AND GRAVITY VENTILATOR TO FACTORY CURB

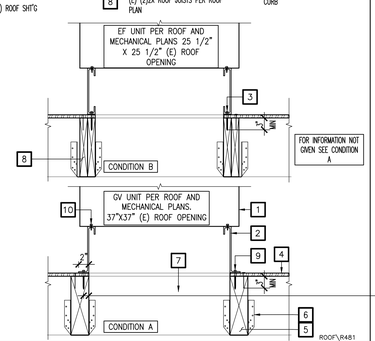

ROOF TOP UNIT SUPPORT SECTION/DETAIL

SCALE NONE | 3

MARK	MAKE	MODEL	STEEL SIZE
20T	JC	AHU-20T	L 3 X 3 X 1/4

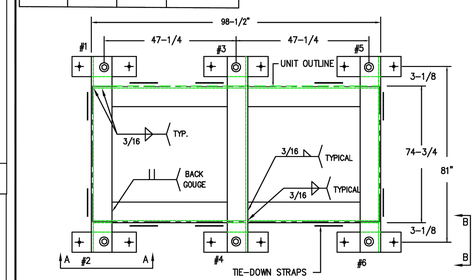

NOTES:
1. APPROXIMATE STEEL WEIGHT & ISOLATORS = 250 LBS
2. FOR ISOLATOR DETAILS, SEE DWG-2.
3. M.W. SAUSSE & CO. INC. IS NOT RESPONSIBLE FOR THE STRUCTURAL INTEGRITY OF THE EQUIPMENT WHEN ANCHORED AS SHOWN.
4. ALL DIMENSIONS TO BE FIELD VERIFIED BY CONTRACTOR BEFORE CONSTRUCTION.

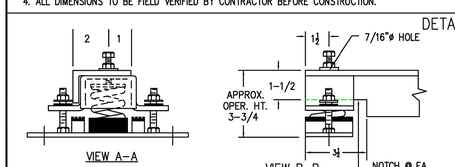

ISOLATORS ARE H.C.A.I. PRE-APPROVED No. OPM-0747-25
VIBREX TYPE: RMU-EQ-2

MTS.	SPRING O.D.	DEFL.
1-6	2"	1"

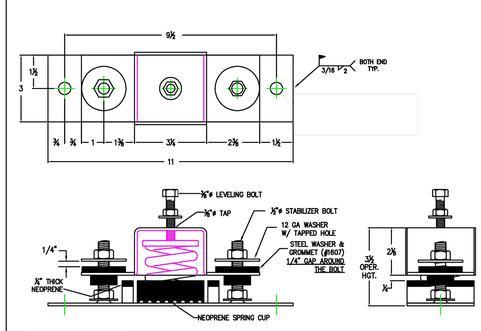

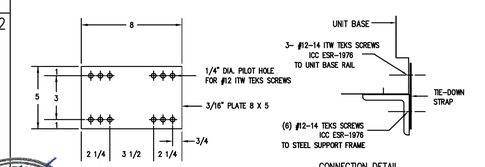

M. W. SAUSSE & CO., INC.
28744 Whitherspoon Pkwy. Valencia, CA 91355
Phone: (661) 257-3311 Fax: (661) 257-7673
Vibrex RMUAD

JOB NAME:	FILLMORE MS GYM
CUST.:	
CUST. P.O.:	
MECH. ENGR.:	DWE
MARK:	AHU-20T

REVISIONS:
A: UNIT WIDTH (8-28-25)
B: WELD CONN (9-3-25)
C: WELD ISO (1-14-26)
D:

DRN: TDT
DATE: 8-26-25
DRAWING NO.: -3C

SCALE NONE | 2

1. (E) SLAB ON GRADE
2. #4 BARS AT 16" O/C BOTH WAYS
3. #4 PERIMETER BARS
4. 1/2" R. EDGER OR 1/2" CHAMFER AT ALL EXPOSED EDGES OF NEW CONCRETE
5. 2X3 CONT. SHAPED KEY
6. #5 X 48" LONG AT 12" O/C WITH BOND BREAKER ON ONE SIDE
7. 3/8" TOOL JOINT WITH SILKAFLEX 2-C "GRAY" COLOR ELASTIC JOINT FILLER AND BACKER ROD
8. STOP REINF. AT JOINT

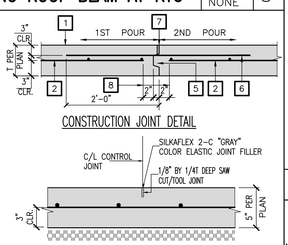

NOTES:
1. CONTROL JOINTS SHALL DIVIDE SLAB ON GRADE INTO SECTIONS WITH AREAS NOT EXCEEDING 144 SQ. FT. (12'X12') WITHOUT REENTRANT CORNERS AND WITH LENGTH TO WIDTH RATIOS NOT EXCEEDING 1-1/2 : 1.
2. SEE LANDSCAPING PLAN, WHEN AVAILABLE FOR LAYOUT.
3. CONTRACTOR TO PROVIDE CONTROL JOINT PATTERN FOR REVIEW AND APPROVAL TO PROJECT LANDSCAPE ARCHITECT.
4. CONCRETE SURFACE TO BE SLIP RESISTANCE

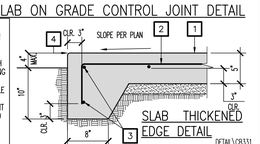

EXTERIOR SLAB ON GRADE DETAILS

SCALE NONE | 7

1. BEAM PER PLAN
2. 3/8" THICK STIFFENER PLATE
3. 3/8" THICK SHEAR PLATE WITH 3/4"ø A325-N BOLTS IN 13/16"ø HOLES STIFFENER PLATES BOTH SIDES OF BEAM WEB
4. MAX. CLEAR DISTANCE 7/8"

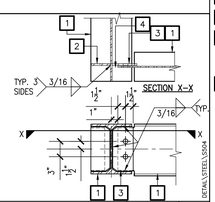

BEAM TO BEAM FRAMING DETAIL

SCALE NONE | 6

NOTES:
1. USE NAILS WITH OVERALL LENGTHS THAT PROVIDE NOT LESS THAN THE REQUIRED PENETRATION NOTED IN THIS TABLE FOR EACH CONNECTION.
2. ONLY SMOOTH SHAFT COMMON NAILS MEETING THE REQUIREMENTS OF THIS TABLE ARE ACCEPTABLE FOR THIS PROJECT UNLESS OTHERWISE NOTED ON THESE STRUCTURAL DRAWINGS.
3. ALTERNATIVE NAILS MUST BE SUBMITTED FOR APPROVAL PRIOR TO START OF CONSTRUCTION.

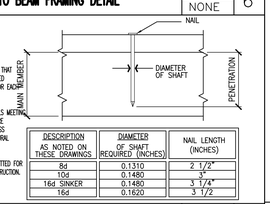

DESCRIPTION AS NOTED ON THESE DRAWINGS	DIAMETER OF SHAFT REQUIRED (INCHES)	NAIL LENGTH (INCHES)
8d	0.1310	2 1/2"
10d	0.1480	3"
16d SINKER	0.1480	3 1/4"
16d	0.1620	3 1/2"

TYPICAL NAIL SIZES

SCALE NONE | 5

IDENTIFICATION STAMP
DIV. OF THE STATE ARCHITECT
APP: 03-125539 INC:
REVIEWED FOR
SS ☑ FLS ☑ ACS ☐
DATE: 03/27/2026

WESTGROUP DESIGNS
ARCHITECTURE | PLANNING | INTERIOR DESIGN
19900 MacArthur Boulevard | Suite 1000
Irvine | California | 92612
949.250.0880 | FAX 949.250.0882
www.westgroupdesigns.com

Coast Engineering Designs Inc.
Civil and Structural Engineers
1500 ADAMS AVE., SUITE 303
COSTA MESA, CA 92626
(714) 393-0337
J.N. 13-2025

FILLMORE MIDDLE SCHOOL - BUILDING F - GYM - HVAC REPLACEMENT

FILLMORE UNIFIED SCHOOL DISTRICT
543 A St, Fillmore, CA 93015

ISSUED FOR:

REVISIONS:

REGISTRATION/SIGNATURE:
REGISTERED PROFESSIONAL ENGINEER TAMMY BLEAU No. 3970 EXP. 12-31-25 STRUCTURAL STATE OF CALIFORNIA
3/19/2026

SHEET TITLE:
OD CONDENSING UNITS FOUNDATION, ANCHORAGE DETAILS, FAN COIL SUPPORT PLATFORM AND ISOLATORS SPECIFICATIONS

SHEET NUMBER:
SD 2

WD PROJ. #	DRAWN BY:	CHECKED	DATE
25817	CEDI	CEDI	09/10/25

© WESTGROUP DESIGNS, INC.

1" = 20'
20 40 60

MECHANICAL GENERAL NOTES

1. THE TOTAL INSTALLATION SHALL COMPLY WITH ANY AND REQUIREMENTS OF THE LEGALLY CONSTITUTED AUTHORITIES HAVING JURISDICTION INCLUDING 2022 CBC (CALIFORNIA BUILDING CODE), 2022 CMC/CPC (CALIFORNIA MECHANICAL AND PLUMBING CODE), 2022 CAL GREEN REQUIREMENTS AND THE 2022 TITLE 24 ENERGY CODE.
2. CONTRACTOR SHALL VISIT THE SITE PRIOR TO BID AND SHALL THOROUGHLY FAMILIARIZE THEMSELVES WITH THE EXISTING CONDITIONS UNDER WHICH WORK WILL BE REQUIRED.
3. INDICATED DIMENSIONS ARE APPROXIMATE AND ARE GIVEN FOR ESTIMATE PURPOSES ONLY. BEFORE PROCEEDING WITH THE WORK CAREFULLY CHECK AND VERIFY DIMENSIONS, SIZES, REQUIRED CLEARANCES AND SHALL ASSUME FULL RESPONSIBILITY FOR THE FITTING OF EQUIPMENT AND MATERIALS HEREIN REQUIRED TO OTHER PARTS OF THE WORK OF OTHER TRADES. DUCT DIMENSIONS SHOWN ON PLANS ARE NET INSIDE CLEAR.
4. THE DRAWINGS ARE ESSENTIALLY DIAGRAMMATIC TO THE EXTENT THAT OFFSETS, BENDS, SPECIAL FITTINGS AND LOCATIONS ARE NOT EXACTLY LOCATED. DUCTWORK DIMENSIONS SHOWN ON THE DRAWINGS ARE NET INSIDE DIMENSIONS DO NOT FABRICATE DUCTWORK FROM THESE DRAWINGS. THE MECHANICAL CONTRACTOR IS RESPONSIBLE FOR SUPPLYING SHOP DRAWINGS WHICH REFLECT THE PROPOSED INSTALLATION. THE SHOP DRAWINGS MUST BE APPROVED BY THE ENGINEER PRIOR TO ANY SHEET METAL FABRICATION. THE MECHANICAL CONTRACTOR IS RESPONSIBLE FOR PROVIDING ACCURATE AS-BUILT DRAWINGS AT THE COMPLETION OF THE PROJECT AND SUBMITTING THEM TO THE ENGINEER AND OWNER.
5. IN THE PREPARATION OF THESE DOCUMENTS, CERTAIN ASSUMPTIONS ARE MADE REGARDING EXISTING CONDITIONS. SOME OF THESE ASSUMPTIONS MAY NOT BE VERIFIABLE WITHOUT EXPENDING ADDITIONAL SUMS OF MONEY OR DESTROYING OTHERWISE ADEQUATE OR SERVICEABLE PORTIONS OF EXISTING BUILDINGS AND/OR EQUIPMENT. THEREFORE, THE ENGINEER SHALL NOT BE HELD RESPONSIBLE FOR ANY CHANGES OR ADDITIONAL COSTS INCURRED DUE TO EXISTING CONDITIONS.
6. CONTRACTOR SHALL COMPLY WITH CONTRACT DOCUMENTS IN LAYING OUT WORK AND EQUIPMENT. COORDINATE THE WORK OF THIS SECTION WITH THE WORK OF OTHER TRADES AND JOB CONDITIONS.
7. THE INSTALLATION OF ACCESS PANELS OR OTHER INDICATING EQUIPMENT OR SPECIALTIES REQUIRING READING, ADJUSTMENT, INSPECTION, REPAIRS, REMOVAL OR REPLACEMENT SHALL BE CONVENIENTLY LOCATED WITH REFERENCE TO THE FINISHED BUILDING.
8. WHERE MATERIAL IS SHOWN ON THE DRAWINGS BUT NOT SPECIFIED, IT SHALL BE OF THE SAME TYPE AND QUALITY AS EXISTING MATERIAL.
9. PROVIDE MANUAL VOLUME DAMPERS AT UPSTREAM PORTION OF TERMINAL AIR BRANCHES. THESE SHALL BE OF THE LOCKING QUADRANT TYPE. WHERE LOCATED OVER SLOPED OR HARD CEILINGS, PROVIDE DURO-DYNE ANGLE GEAR DRIVE OR BOWDEN CABLE CONTROL SYSTEM OR PROVIDE UNITED ENERTECH POWER/BALANCE SYSTEM. REMOTE PLATE LOCATIONS TO BE LOCATED AS DETERMINED BY ARCHITECT.
10. PROVIDE MINIMUM 1" ACOUSTICAL LINING IN DUCTWORK WITHIN 10 FEET OF AIR MOVING EQUIPMENT. PROVIDE DURO-DYNE FLEXIBLE CONNECTION AT DUCT AT EQUIPMENT LOCATIONS.
11. DUCTS IN AN UNCONDITIONED SPACE OR EXTERIOR DUCT WORK SHALL HAVE A MIN. OF R-8 INSULATION. DUCTS WITHIN THE CONDITIONED ENVELOPE ABOVE A CEILING SHALL HAVE A MIN. OF R-4.2 INSULATION. EXTERIOR DUCTWORK SHALL NOT HAVE INSULATION EXPOSED TO THE ENVIRONMENT.
12. WHERE NOT SPECIFICALLY INDICATED OTHERWISE, DUCTWORK AND EQUIPMENT SHALL BE SUPPORTED PER THE CURRENT APPLICABLE CALIFORNIA MECHANICAL CODE.
13. WHEN A FIRE ALARM SYSTEM WITH FULL COVERAGE SMOKE DETECTORS ARE PROVIDED, DUCT SMOKE DETECTORS MAY BE ELIMINATED. FIRE ALARM CONTRACTOR SHALL WIRE SMOKE/FIRE DAMPER ACTIVATORS TO AREA SMOKE DETECTORS.
14. TESTING, ADJUSTING, AND BALANCING (TAB) OF THE AIR CONDITIONING SYSTEMS AND RELATED ANCILLARY EQUIPMENT WILL BE PERFORMED BY A CERTIFIED, INDEPENDENT THIRD PARTY, AABC AGENCY PROCURED BY THE MECHANICAL CONTRACTOR. A COMPLETE AIR BALANCE REPORT TO BE SUBMITTED TO THE ADMINISTRATIVE AUTHORITY AND TO THE MECHANICAL ENGINEER AND APPROVED PRIOR TO FINAL PAYMENT.
15. AIR HANDLING DUCT SYSTEMS SHALL BE CONSTRUCTED, INSTALLED AND INSULATED AS PROVIDED IN CHAPTER 6 OF 2022 CMC.
16. MATERIALS EXPOSED WITHIN DUCTS OR PLENUMS SHALL BE NONCOMBUSTIBLE OR SHALL HAVE FLAME SPREAD INDEX NOT GREATER THAN 25 AND A SMOKE DEVELOPED INDEX NOT GREATER THAN 50 (2022 CMC SECTION 602.2).
17. DUCTWORK SHALL BE HARD DUCT. FLEXIBLE AIR DUCTS SHALL BE NOT MORE THAN 5' IN LENGTH AND SHALL NOT BE USED IN LIEU OF RIDGED ELBOWS OR FITTINGS. FLEXIBLE AIR DUCTS SHALL BE PERMITTED TO BE USED AS AN ELBOW AT A TERMINAL DEVICE (SEC 603.4.1 CMC).
18. ANY SUBSTITUTION MADE AFFECTING THE STRUCTURAL, ACCESS OR FIRE & SAFETY PORTIONS OF THE PROJECT SHALL BE SUBMITTED TO DSA FOR REVIEW AND APPROVAL AS REQUIRED BY 2022 CBC PART 1 SECTION 4-338. A CCD WILL BE REQUIRED.
19. THERMOSTATS SHALL COMPLY WITH THE 2022 ENERGY COMMISSION AND SHALL BE WIFI ENABLED.
20. AT THE TIME OF ROUGH INSTALLATION, OR DURING STORAGE ON THE CONSTRUCTION SITE AND UNTIL FINAL STARTUP OF THE HEATING AND COOLING EQUIPMENT, DUCT AND OTHER RELATED AIR DISTRIBUTION COMPONENT OPENINGS SHALL BE COVERED WITH TAPE, PLASTIC, SHEET METAL OR OTHER METHODS ACCEPTABLE TO THE ENFORCING AGENCY TO REDUCE THE AMOUNT OF DUST OR DEBRIS WHICH MAY COLLECT IN THE SYSTEM.
21. WHERE MORE THAN ONE HEATING, COOLING, VENTILATING, OR REFRIGERATING SYSTEM IS INSTALLED ON THE ROOF OF A BUILDING OR WITHIN A BUILDING, IT SHALL BE PERMANENTLY IDENTIFIED AS TO THE AREA OR SPACE SERVED BY THE EQUIPMENT. (CMC 303.6) PROVIDE PERMANENT LABELING AND IDENTIFICATION FOR HVAC UNIT (SINGLE SYSTEM OR MULTIPLE) AND THERMOSTATS. IDENTIFICATION FOR THE THERMOSTATS SHALL CORRELATE TO THE HVAC UNIT THAT IT SERVES.
22. AIR CONDITIONING REFRIGERATION SERVICE PORTS LOCATED OUTDOORS SHALL BE FITTED WITH LOCKING TYPE TAMPER RESISTANT CAP OR SHALL BE PROTECTED FROM UNAUTHORIZED ACCESS BY A MEANS ACCEPTABLE TO DSA PER CMC SECTION 1105.11.
23. UNLESS SPECIFICALLY SHOWN ON THESE DRAWINGS, NO STRUCTURAL MEMBER SHALL BE CUT, DRILLED NOR NOTCHED WITHOUT PRIOR AUTHORIZATION IN WRITING BY THE STRUCTURAL ENGINEER OF RECORD AND DSA.

MECHANICAL BASIS OF DESIGN

A. OUTDOOR DESIGN CONDITIONS:

1. SUMMER: 100°F DB/69°F WB
2. WINTER: 36°F

B. DESIGN CONDITIONS:

OCCUPANT SPACE	OCG DENSITY	LIGHTING DENSITY	COOLING TEMPERATURE	HEATING TEMPERATURE	RELATIVE HUMIDITY	VENTILATION PER OCCUPANT
OFFICE	100 SF/OCC	0.7 W/SF	74°F+/-2°F	70°F+/-2°F	DESIGNED TO 50% NOT CONTROLLED	15 CFM/OCC
LOBBY	15 SF/OCC	0.85 W/SF	74°F+/-2°F	70°F+/-2°F	DESIGNED TO 50% NOT CONTROLLED	15 CFM/OCC
ELECTRICAL ROOM	N/A	N/A	90°F MAX	N/A	N/A	N/A
DATA/ TELECOM	N/A	N/A	78°F MAX	N/A	N/A	N/A

C. HVAC CONTROL METHOD:

1. ENERGY MANAGEMENT SYSTEM (EMS) CONTROL OF ALL EQUIPMENT.
2. TIE-IN TO CAMPUS EMS
3. ELECTRICAL ROOM TO HAVE TEMPERATURE MONITORING ONLY

D. CALIFORNIA VENTILATION CRITERIA:

1. COMPLY WITH CALIFORNIA BUILDING ENERGY EFFICIENCY STANDARD.
   A. GREATER OF 15 CFM/PERSON OR 0.15 CFM/SF

E. EXHAUST TO OUTDOORS (MINIMUM RATES)

1. RESTROOMS: 75 CFM(WC or U)

F. BUILDING ENVELOPE:

1. REFER TO THE ARCHITECTURAL DRAWINGS AND SPECIFICATIONS FOR ENVELOPE REQUIREMENTS
2. ALL ENVELOPE COMPONENTS SHALL MEET CALIFORNIA ENERGY CODE MINIMUM PRESCRIPTIVE CRITERIA.

G. DUCTWORK DESIGN CRITERIA (MAXIMUM ALLOWABLE AIR PRESSURE DROPS AND AIR VELOCITIES) TO MEET HIGH EFFICIENCY OPERATION WITH MINIMAL ACOUSTICAL NOISE. DUCT STATIC PRESSURE FRICTION LOSS SHALL NOT EXCEED 0.2" PER 100 FEET IN MECHANICAL ROOMS AND SHAFTS. LOW PRESSURE SUPPLY AND EXHAUST DUCT STATIC PRESSURE FRICTION LOSS BASED ON A MAXIMUM OF 0.08" PER 100 FEET. LOW PRESSURE RETURN DUCT STATIC PRESSURE FRICTION LOSS BASED ON A MAXIMUM OF 0.05" PER 100 FEET. MEDIUM PRESSURE DUCTWORK SHALL NOT EXCEED MAXIMUM VELOCITY AS LISTED BELOW.

1. IN ADDITION, MAXIMUM SUPPLY, RETURN AND EXHAUST DUCT AIR FLOW VELOCITIES, REGARDLESS OF PRESSURE DROP, SHALL NOT EXCEED THE FOLLOWING CRITERIA:
   A. MAINS ABOVE CEILING: 1750 FPM
   B. MAINS ABOVE OPEN OCCUPIED SPACES: 1450 FPM
   C. BRANCHES ABOVE CEILING: 1400 FPM
   D. BRANCHES ABOVE OPEN OCCUPIED SPACES: 1150 FPM
   E. RUN-OUTS TO DIFFUSERS: 725 FPM
   F. IN SHAFTS: 2500 FPM
   G. IN MECHANICAL ROOMS: 3000 FPM

H. ACOUSTICAL

1. THE FOLLOWING NOISE NC/RC CRITERIA LEVELS WILL BE DESIGNED AS DEFINED IN THE ASHRAE HVAC APPLICATIONS HANDBOOK. THESE LEVELS ADDRESS THE MECHANICAL SYSTEMS ONLY. ACTUAL SOUND PERFORMANCE REQUIREMENTS FOR EACH SPACE MUST BE VERIFIED WITH ACOUSTICAL CONSULTANT.
   A. CORRIDORS AND LOBBIES: 40
   B. OFFICES: 30

AIR DISTRIBUTION SCHEDULE

SYMBOL	DESCRIPTION	MANUFACTURER & MODEL NO.	FINISH	LOCATION	ACCESSORIES
SG	DUCT MOUNTED/SIDEWALL DIFFUSER	"PRICE" MODEL HCD	WHITE POWDER COAT	ALL	1 2
CE / CR	CEILING REGISTER	"PRICE" MODEL 80	WHITE POWDER COAT	ALL ELSE	1

1. PROVIDE WITH OPPOSED BLADE DAMPERS.
2. PROVIDE WITH SPLIT BLADE FOR MULTIDIRECTIONAL AIRFLOW.

PIPE INSULATION SCHEDULE

FLUID OPERATING TEMPERATURE RANGE (°F)	INSULATION CONDUCTIVITY: CONDUCTIVITY (IN Btu-in/hr per sqft/°F)	INSULATION CONDUCTIVITY: MEAN RATING TEMPERATURE (°F)		NOMINAL PIPE DIAMETER (IN INCHES): <1	1 to < 1.5	1.5 to < 4	4 to < 8	8 and larger
SPACE COOLING SYSTEMS (CHILLED WATER, REFRIGERANT AND BRINE) AND CONDENSATE				MINIMUM PIPE INSULATION REQUIRED (THICKNESS OR R-VALUE): <1	1 to < 1.5	1.5 to < 4	4 to < 8	8 and larger
40° - 60°	0.21 - 0.27	75	INCHES	0.5	0.5	1.0	1.0	1.0
			R-VALUE	R 3	R 3	R 7	R 6	R 5

NOTE:
1. WHERE INSULATED PIPING IS EXPOSED OUTDOORS, IT SHALL BE COVERED. COVER OUTDOOR EXPOSED INSULATED PIPING WITH 0.016 INCH THICK CORRUGATED ALUMINUM JACKET.
2. CONDENSATE LINES ABOVE CEILINGS TO BE ASSUMED TO HAVE TEMPERATURE IN THE 40°-60°F RANGE AND THUS SHALL BE INSULATED PER THE TABLE ABOVE.

ANCHORAGE AND BRACING NOTES

MEP COMPONENT ANCHORAGE NOTE

ALL MECHANICAL, PLUMBING, AND ELECTRICAL COMPONENTS SHALL BE ANCHORED AND INSTALLED PER THE DETAILS ON THE DSA APPROVED CONSTRUCTION DOCUMENTS. THE FOLLOWING COMPONENTS SHALL BE ANCHORED OR BRACED TO MEET THE FORCE AND DISPLACEMENT REQUIREMENTS PRESCRIBED IN THE 2022 CBC SECTIONS 1617A.1.18 THROUGH 1617A.1.26 AND ASCE 7-16 CHAPTER 13, 26 AND 30:

1. ALL PERMANENT EQUIPMENT AND COMPONENTS.
2. TEMPORARY, MOVABLE OR MOBILE EQUIPMENT THAT IS PERMANENTLY ATTACHED (E.G. HARD WIRED) TO THE BUILDING UTILITY SERVICES SUCH AS ELECTRICITY, GAS, OR WATER. "PERMANENTLY ATTACHED" SHALL INCLUDE ALL ELECTRICAL CONNECTIONS EXCEPT PLUGS FOR 110/220 VOLT RECEPTACLES HAVING A FLEXIBLE CABLE.
3. TEMPORARY, MOVABLE OR MOBILE EQUIPMENT WHICH IS HEAVIER THAN 400 POUNDS OR HAS A CENTER OF MASS LOCATED 4 FEET OR MORE ABOVE THE ADJACENT FLOOR OR ROOF LEVEL THAT DIRECTLY SUPPORT THE COMPONENT IS REQUIRED TO BE RESTRAINED IN A MANNER APPROVED BY DSA.

THE FOLLOWING MECHANICAL AND THE ELECTRICAL COMPONENTS SHALL BE POSITIVELY ATTACHED TO THE STRUCTURE BUT NEED NOT DEMONSTRATE DESIGN COMPLIANCE WITH THE REFERENCES NOTED ABOVE. THESE COMPONENTS SHALL HAVE FLEXIBLE CONNECTIONS PROVIDED BETWEEN THE COMPONENT AND ASSOCIATED DUCTWORK, PIPING, AND CONDUIT. FLEXIBLE CONNECTIONS MUST ALLOW MOVEMENT IN BOTH TRANSVERSE AND LONGITUDINAL DIRECTIONS:

A. COMPONENTS WEIGHING LESS THAN 400 POUNDS AND HAVING A CENTER OF MASS LOCATED 4 FEET OR LESS ABOVE THE ADJACENT FLOOR OR ROOF LEVEL THAT DIRECTLY SUPPORT THE COMPONENT.

B. COMPONENTS WEIGHING LESS THAN 20 POUNDS, OR IN THE CASE OF DISTRIBUTED SYSTEMS, LESS 5 POUNDS PER FOOT, WHICH ARE SUSPENDED FROM A ROOF OR FLOOR OR HUNG FROM A WALL.

THE ANCHORAGE OF ALL MECHANICAL, ELECTRICAL AND PLUMBING COMPONENTS SHALL BE SUBJECT TO THE APPROVAL OF THE DESIGN PROFESSIONAL IN GENERAL RESPONSIBLE CHARGE OR STRUCTURAL ENGINEER DELEGATED RESPONSIBILITY AND ACCEPTANCE BY DSA. THE PROJECT INSPECTOR WILL VERIFY THAT ALL COMPONENTS AND EQUIPMENT HAVE BEEN ANCHORED IN ACCORDANCE WITH THE ABOVE REQUIREMENTS.

MEP DISTRIBUTION SYSTEM BRACING NOTES FOR PIPING, DUCTWORK, AND ELECTRICAL CONDUIT:

PIPING, DUCTWORK, AND ELECTRICAL DISTRIBUTION SYSTEMS SHALL BE BRACED TO COMPLY WITH THE FORCES AND DISPLACEMENTS PRESCRIBED IN ASCE 7 SECTION 13.3 AS DEFINED IN ASCE 7 SECTIONS 13.6.5, 13.6.6, 13.6.7, 13.6.8; AND 2022 CBC, SECTIONS 1617A.1.24, 1617A.1.25 AND 1617A.1.26.

THE METHOD OF SHOWING BRACING AND ATTACHMENTS TO THE STRUCTURE FOR THE IDENTIFIED DISTRIBUTION SYSTEMS ARE AS NOTED BELOW. THE MEP DESIGN PROFESSIONAL ENGINEER RESPONISIBLE FOR CONTENT ON THESE SHEETS HAS VERIFIED THAT THE DESIGN METHODS IDENTIFIED BELOW ARE IN ACCORDANCE WITH DSA IR 16-13.

MECHANICAL PIPING (MP), MECHANICAL DUCTS (MD), PLUMBING PIPING (PP), ELECTRICAL DISTRIBUTION SYSTEMS (E):

MP☒ MD ☒ PP ☐ E ☐ OPTION 1: PROJECT-SPECIFIC DESIGN.

MP☐ MD ☐ PP ☐ E ☐ OPTION 2: DESIGN BASED ON OSHPD OPM, WITHIN PROJECT SUBMITTAL.

MP☐ MD ☐ PP ☐ E ☐ OPTION 3: DESIGN BASED ON OSHPD OPM, DEFFERED SUBMITTAL.

TITLE 24 PERFORMANCE TESTING NOTES

1. THE CALIFORNIA ENERGY CODE SECTION 10-103 REQUIRES ACCEPTANCE TESTING ON ALL NEWLY INSTALLED LIGHTING CONTROLS, MECHANICAL SYSTEMS, ENVELOPES, AND PROCESS EQUIPMENT AFTER INSTALLATION AND BEFORE PROJECT COMPLETION. AN ACCEPTANCE TEST IS A FUNCTIONAL PERFORMANCE TEST TO HELP ENSURE THAT THE NEWLY INSTALLED EQUIPMENT IS OPERATING AND IN COMPLIANCE WITH THE ENERGY CODE.
2. LIGHTING CONTROLS ACCEPTANCE TESTS MUST BE PERFORMED BY A CERTIFIED LIGHTING CONTROLS ACCEPTANCE TEST TECHNICIAN (ATT).
3. MECHANICAL SYSTEM ACCEPTANCE TESTS MUST BE PERFORMED BY A CERTIFIED MECHANICAL ATT FOR PROJECTS SUBMITTED ON OR AFTER OCTOBER 1, 2021.
4. ENVELOPE AND PROCESS EQUIPMENT ACCEPTANCE TESTS SHALL BE PERFORMED BY THE INSTALLING CONTRACTOR, ENGINEER/ARCHITECT OR RECORD OF THE OWNER'S AGENT.
5. A LISTING OF CERTIFIED ATT CAN BE FOUND AT: HTTPS://WWW.ENERGY.CA.GOV/PROGRAMS-AND-TOPICS/PROGRAMS/ACCEPTANCE-TEST-TECHNICIAN-CERTIFICATION-PROVIDER-PROGRAM/ACCEPTANCE
6. THE ACCEPTANCE TESTING PROCEDURES MUST BE REPLACED, AND DEFICIENCIES MUST BE CORRECTED BY THE BUILDER OR INSTALLING CONTRACTOR UNTIL THE CONSTRUCTION/INSTALLATION OF THE SPECIFIC SYSTEM CONFORM AND PASS THE REQUIRED ACCEPTANCE CRITERIA. PROJECT INSPECTORS WILL COLLECT THE FORMS TO CONFIRM THAT THE REQUIRED ACCEPTANCE TESTS HAVE BEEN COMPLETED.

APPLICABLE NOTES

1. 2025 CALIFORNIA ADMINISTRATIVE CODE (CAC), PART 1, TITLE 24 CCR
2. 2022 CALIFORNIA BUILDING CODE (CBC), PART 2, TITLE 24 CCR (2021 INTERNATIONAL BUILDING CODE, VOL. 1 & 2, AND 2022 CALIFORNIA AMENDMENTS)
3. 2022 CALIFORNIA ELECTRICAL CODE (CEC), PART 3, TITLE 24 CCR (2020 NATIONAL ELECTRICAL CODE AND 2022 CALIFORNIA AMENDMENTS)
4. 2022 CALIFORNIA MECHANICAL CODE (CMC), PART 4, TITLE 24 CCR (2021 IAPMO UNIFORM MECHANICAL CODE AND 2022 CALIFORNIA AMENDMENTS)
5. 2022 CALIFORNIA PLUMBING CODE (CPC), PART 5, TITLE 24 CCR (2021 IAPMO UNIFORM PLUMBING CODE AND 2022 CALIFORNIA AMENDMENTS)
6. 2022 CALIFORNIA ENERGY CODE (CEC), PART 6, TITLE 24 CCR
7. 2022 CALIFORNIA FIRE CODE (CFC), PART 9, TITLE 24 CCR (2021 INTERNATIONAL FIRE CODE AND 2022 CALIFORNIA AMENDMENTS)
8. 2022 CALIFORNIA EXISTING BUILDING CODE (CEBC), PART 10, TITLE 24 CCR (2021 INTERNATIONAL EXISTING BUILDING CODE AND 2022 CALIFORNIA AMENDMENTS)
9. 2022 CALIFORNIA GREEN BUILDING STANDARDS CODE (CALGREEN), PART 11, TITLE 24 CCR
10. 2022 CALIFORNIA REFERENCED STANDARDS CODE, PART 12, TITLE 24 CCR
11. TITLE 19 CCR, PUBLIC SAFETY, STATE FIRE MARSHALL REGULATIONS

PIPE MATERIAL SCHEDULE

SERVICE	PIPE MATERIAL & WEIGHT	TYPE OF JOINTS	PRESSURE FITTINGS MATERIAL	SHUT-OFF RATINGS PSI-SwP	VALVE
FUEL GAS	STEEL 40, BLACK STEEL 40, BLACK POLYTHYLENE PIPING STAINLESS STEEL TUBING	SCREWED WELDED PER MANF.	MALL. IRON STEEL WELD STAINLESS STEEL TUBING	150 150 PER MANF.	SQR HEAD COCK PER MANF.
CONDENSATE	COPPER L TUBE	SOLDERED	BRONZE	125	N/A

NOTE: ALL EXPOSED FUEL GAS PIPING SHALL BE PRIME AND PAINTED, COORDINATE COLOR WITH ARCHITECT.

HVAC LEGEND

SYMBOLS	ABBREVIATIONS	DESCRIPTIONS
		SQ., RECT., OR ROUND DUCT SIZE AS NOTED
		DUCT WITH ACOUSTICAL LINER
		EXISTING DUCT OR EQUIPMENT TO REMAIN
		EXISTING DUCT OR EQUIPMENT TO BE REMOVED
		FLEXIBLE DUCT
	CD	CEILING DIFFUSER, SUPPLY
	CR / CE	CEILING REGISTER, RETURN / EXHAUST
		SECTION THROUGH DUCT
		DUCT DOWN
		RECTANGULAR TO ROUND TRANSITION
		DUCT ACCESS DOOR
		MITERED DUCT ELBOW WITH TURNING VANES
SFD		COMBINATION SMOKE / FIRE DAMPER WITH ACCESS DOOR
	MVD	MANUAL VOLUME DAMPER, LOCKING QUADRANT TYPE FOR ROUND DUCT OR OPPOSED BLADE TYPE FOR RECT DUCT.
		SECTION REFERENCE
DETAIL No. / SHEET No.		DETAIL REFERENCE
EQUIPMENT ID. No.		EQUIPMENT DESIGNATION AND NUMBER
	OBD	OPPOSED BLADE DAMPER
		PARALLEL DAMPER
T	TSTAT	THERMOSTAT
CO2	CO2 SENSOR	CO2 SENSOR
H		HUMIDISTAT
HI		HUMIDITY INDICATOR
B		BY-PASS TIMER
BD		BACK DRAFT DAMPER
S		SWITCH
TC		TIME CLOCK
MT		MASTER CONTROL STAT
DD		DUCT DETECTOR
RS		REMOTE SENSOR
	A.F.F.	ABOVE FINISHED FLOOR
	CFM	CUBIC FEET OF AIR PER MINUTE
	CFMS	CFM SUPPLY
	CFMR	CFM RETURN
	CFME	CFM EXHAUST
	O.S.A.	OUTSIDE AIR
	(E) or EXIST.	EXISTING
	(N)	NEW
	30"x10"	INDICATES RECTANGULAR DUCT SIZE: WIDTH x HEIGHT
	12"Ø	INDICATES ROUND DUCT SIZE: DIAMETER
	POC	POINT OF CONNECTION
	POD	POINT OF DEMOLITION
M		MOTORIZED DAMPER
	REFR.	REFRIGERANT LINES

REFRIGERANT CONCENTRATION CALC. - GYM

1. MAXIMUM QUANTITY OF REFRIGERANT PER CMC TABLE 1102.3, REFRIGERANT R-454B = 22 LBS/1,000 CU.FT SPACE.
2. SPACE VOLUME = 10,107 SQ.FT X 24.33 FT = 245,903 CU.FT. (GYM)
3. MAX. ALLOWABLE REFRIGERANT = 245,903 X (22/1,000) = 5,410 LBS.
4. A/C SYSTEM REFRIGERANT = 57 x 2 = 114 LBS.
5. RESULT: SPACE COMPLIES WITH CMC 1104.2.

REFRIGERANT CONCENTRATION CALC. - STAGE

1. MAXIMUM QUANTITY OF REFRIGERANT PER CMC TABLE 1102.3, REFRIGERANT R-454B = 22 LBS/1,000 CU.FT SPACE.
2. SPACE VOLUME = 1,627 SQ.FT X 10.58 FT = 17,137 CU.FT. (STAGE)
3. MAX. ALLOWABLE REFRIGERANT = 17,137 X (22/1,000) = 377 LBS.
4. A/C SYSTEM REFRIGERANT = 22 LBS.
5. RESULT: SPACE COMPLIES WITH CMC 1104.2.

MECHANICAL SHEET INDEX

SHEET NUMBER	SHEET NAME
M0-0.1	MECHANICAL LEGENDS NOTES & SCHEDULES
M0-0.2	MECHANICAL SCHEDULES CONT.
M1-1.2	MECHANICAL SITE PLAN
M2-1.1	MECHANICAL DEMO PLAN - FIRST FLOOR
M2-1.2	MECHANICAL DEMOLITION PLAN - ROOF
M3-1.1	MECHANICAL PLAN - FIRST FLOOR
M3-1.2	MECHANICAL PLAN - ROOF
M4-1.1	MECHANICAL DETAILS
M-5.1	T24 COMPLIANCE DOCUMENTS
M-5.2	T24 COMPLIANCE DOCUMENTS CONT.

IDENTIFICATION STAMP
DIV. OF THE STATE ARCHITECT
APP: 03-125539 INC:
REVIEWED FOR
SS ☑ FLS ☑ ACS ☐
DATE: 03/27/2026

WESTGROUP DESIGNS
19900 MacArthur Boulevard I Suite 1000
Irvine I California I 92612
949.250.0880 I FAX 949.250.0882
www.westgroupdesigns.com

REGISTERED PROFESSIONAL ENGINEER
STEVEN D. WESTGROUP
No. 33209
Exp.06/30/2026
MECHANICAL
STATE OF CALIFORNIA

412 E. Vanderbilt Way
San Bernardino, CA 92408
Phone: 909.890.3700
Fax: 909.890.3770
Email: cadd@designwesteng.com
DESIGN WEST ENGINEERING
MECHANICAL • ELECTRICAL • ENERGY CONSULTANTS

FILLMORE MIDDLE SCHOOL - BUILDING F - GYM - HVAC REPLACEMENT

FILLMORE UNIFIED SCHOOL DISTRICT
543 A St, Fillmore, CA 93015

ISSUED FOR:
DSA V2 SUBMITTAL 11/21/25

REVISIONS:

REGISTRATION/SIGNATURE:

SHEET TITLE:
MECHANICAL LEGENDS NOTES & SCHEDULES

SHEET NUMBER:
M0-0.1

WD PROJ. #	DRAWN BY:	CHECKED	DATE
25817	OB / IC	AO	09/10/25

© WESTGROUP DESIGNS, INC.

25-099

PRINTED: 2/13/2026 10:20:44 AM
PATH: Autodesk Docs://25-099 Fillmore Middle School Gym HVAC Replacement/25-099 Fillmore Middle School Gym HVAC Replacement_MEP_Central_R24.rvt

ROOF TOP UNIT SCHEDULE

TAG	MANUFACTURER & MODEL NO.	AREA LOCATION	FAN SYSTEM CFM	FAN SYSTEM ESP	FAN SYSTEM RPM	FAN SYSTEM DRIVE	FAN SYSTEM BHP	FAN SYSTEM OSA	DESIGN COOLING CONDITION AMBIENT DB/WB	ENTERING DB/WB	LEAVING DB/WB	SENSIBLE (MBH)	TOTAL (MBH)	EFFICIENCY	HEATING CAPACITY (MBH) AMB. TEMP.°F	EAT °F	LAT °F	TOTAL (MBH)	TOTAL @ 17°F (MBH)	EFFICIENCY	UNIT ELECTRICAL (10) V-PH-HZ	AMPS	POWER EXHAUST ELECTRICAL (3) V-PH-HZ	FLA	HP	CFM	WEIGHT (LBS.)	FILTER	REFRIG. TYPE	ANCHORAGE DETAIL REFERENCE	REMARKS (SEE EQUIPMENT NOTES BELOW)
RTU 1	YORK WXE12A2B3AA5A111A1	ROOF	4,000	1.25"	932	BELT	2.70	720	100°F / 69°F	84°F / 65°F	55°F / 53°F	106.7	113.9	11.2 EER 14.4 IEER	36	58	94	93.4	65	2.25 COP @17°F	208-3-60	122.8 MCA 125 MOCP	208-3-60	5.6 AMPS	2.0	4,000	UNIT: 1,070 CURB: 250 TOTAL: 1,583 / PE/ECONO: 248 ELEC. HEAT: 15	MERV 13	R-454B	9/M4-1.1 11/M4-1.1	1 2 3 4 5 6 7 8 9 10

1. PROVIDE MODULATING ECONOMIZER AND MODULATING POWER EXHAUST WITH ENTHALPY CONTROL. PROVENT PEDCPRLEN25M.
2. VERTICAL DISCHARGE.
3. POWER EXHAUST TO RECEIVE SEPARATE POWER.
4. PROVIDE NEW RIGID CURB.
5. PER CBC 915, A CO SENSOR WITH ALARM SIGNAL SHALL BE INSTALLED IN A CLASSROOM WHEN FUEL BURNING APPLIANCES ARE INSTALLED. SEE ELECTRICAL DRAWINGS
6. OSA DAMPER TO ACTUATE TO ALLOW MAX. OSA (NON ECONOMY CYCLE) WHEN CO2 SENSOR READS 1,000 P.P.M. AND ABOVE. OTHERWISE, OSA DAMPER TO BE AT MINIMUM POSITION.
7. ECONOMIZER OUTSIDE AIR TEMPERATURE SENSOR TO BE LOCATED AWAY FROM DIRECT SUNLIGHT.
8. PROVIDE DUCT SMOKE DETECTOR TO SIGNAL AUTOMATIC SHUTOFF.
9. PROVIDE WITH VENSTAR T8950 TITLE 24 COMPLIANT PROGRAMMABLE THERMOSTAT.
10. PROVIDE 18.6 KW ELECTRIC HEATER FOR PREHEAT. ELECTRIC HEAT INCLUDED IN UNIT SINGLE POINT OF CONNECTION.

FAN COIL SCHEDULE

TAG	MANUFACTURER & MODEL NO.	AREA SERVED	COOLING DESIGN CONDITION EAT DB/WB	LAT DB/WB	HEATING DESIGN CONDITION EAT DB	LAT DB	CFM	ESP	RPM	REFRIGERANT TYPE	ELECTRICAL (7) V-PH-HZ	MCA	MOCP	MIN OSA	MAX OSA	OPERATING WEIGHT (LBS.)	ANCHORAGE DETAIL REFERENCE	SMOKE DUCT DETECTOR	REMARKS (SEE EQUIPMENT NOTES BELOW)
FC 1	YORK GM240C00F2BAA1	GYM	83°F / 65°F	58°F / 54°F	59°F	90°F	8,000	1.5"	1,072	R-454B	208V-3ø-60Hz	120.8	125	1,600	2,625	UNIT: 963 ECONO. 220 / VIBRATION ISO. FRAME: 250 ELECTRIC HEATER: 30 TOTAL: 1,463	3/M4-1.1 8/M4-1.1	YES	1 2 3 4 5 6 7
FC 2	YORK GM240C00F2BAA1	GYM	83°F / 65°F	58°F / 54°F	59°F	90°F	8,000	1.5"	1,072	R-454B	208V-3ø-60Hz	120.8	125	1,600	2,625	UNIT: 963 ECONO. 220 / VIBRATION ISO. FRAME: 250 ELECTRIC HEATER: 30 TOTAL: 1,463	3/M4-1.1 8/M4-1.1	YES	1 2 3 4 5 6 7

EQUIPMENT NOTES:

1. PROVIDE WITH DISCONNECT SWITCH AND JUNCTION BOX.
2. PROVIDE WITH VENSTAR T8950 TITLE 24 COMPLIANT PROGRAMMABLE THERMOSTAT.
3. PROVIDE & RUN FULL SIZE CONDENSATION DRAIN LINE WITH TRAP TO NEAREST APPROVED FLOOR SINK, RECEPTOR, OR TAILPIECE OF LAVATORY.
4. PROVIDE FLANDERS LOW PRESSURE DROP MERV 13 FILTER. MAX. 0.15" S.P. CLEAN.
5. PROVIDE SECONDARY CONDENSATE OVERFLOW SAFETY SWITCH MANUFACTURED BY "SAFE-T SWITCH" MODEL NO. SS3 TO SHUT OFF UNIT WHEN CONDENSATE DRAIN OVERFLOWS. INSTALLED BY MECHANICAL CONTRACTOR AND WIRED THROUGH TERMOSTAT.
6. PROVIDE PROVENT ECONOMIZING MIXING BOX. HORIZONTAL APPLICATION. MODULATING CONTROLS WITH ENTHALPY.
7. PROVIDE 24 KW ELECTRIC HEATER FOR PREHEAT. ELECTRIC HEAT INCLUDED IN UNIT SINGLE POINT OF CONNECTION.

HEAT PUMP SCHEDULE

TAG	MANUFACTURER & MODEL NO.	COOLING CAPACITY AMBIENT DB/WB °F	BTU/HR	EER/ IEER	HEATING CAPACITY AMBIENT TEMP °F	LAT °F	BTU/HR	EFFICIENCY	ELECTRICAL V-PH-HZ	MCA	MOCP	OPR. WEIGHT (LBS.)	ANCHORAGE DETAIL REFERENCE	REMARKS (SEE EQUIPMENT NOTES BELOW)
HP 1	YORK WD240C00A2AAA1	100 / 69	227,000 TOTAL CAP. 197,000 SENS. CAP.	10.6 EER 14.4 IEER	36	81	177.2 TOTAL CAP.	3.30 COP AT 47°F	208V-3ø-60Hz	75.3	100	980 LBS.	4/M4-1.1	1 2 3 4
HP 2	YORK WD240C00A2AAA1	100 / 69	227,000 TOTAL CAP. 197,000 SENS. CAP.	10.6 EER 14.4 IEER	36	81	177.2 TOTAL CAP.	3.30 COP AT 47°F	208V-3ø-60Hz	75.3	100	980 LBS.	4/M4-1.1	1 2 3 4

EQUIPMENT NOTES:

1. SIZE AND MAXIMUM LENGTH OF REFRIGERANT LINES SHALL BE COORDINATED WITH HEAT PUMP MANUFACTURER.
2. PROVIDE REFRIGERATION AUTO TEST FUNCTION FOR SIMPLIFIED COMMISSIONING AND VERIFICATION OF SENSOR OPERATION AND REFRIGERANT VOLUME.
3. PROVIDE OUTDOOR UNIT WITH 5 MINUTE CYCLE PROTECTION.
4. PROVIDE WITH DISCONNECT SWITCH.

EXHAUST FAN SCHEDULE

TAG	MANUFACTURER & MODEL NO.	AREA LOCATION	FAN SYSTEM MIN. CFM	MAX. CFM	ESP	RPM	HP	SONES	ELECTRICAL V-PH-HZ	RLA	OPR. WT WITH ACCESSORIES (LBS.)	REMARKS (SEE EQUIPMENT NOTES BELOW)	ANCHORAGE DETAIL REFERENCE
EF 1	COOK ACE-D VF 195C17D (VF)	ROOF	800	4000	0.75"	1,065	1-1/2	16.2	208-3-60	4.4	165	1 2 3 4 5 6	1/M4-1.1
EF 2	COOK ACE-D VF 195C17D (VF)	ROOF	800	4000	0.75"	1,065	1-1/2	16.2	208-3-60	4.4	165	1 2 3 4 5 6	1/M4-1.1
EF 3	COOK ACE-D VF 195C17D (VF)	ROOF	800	4000	0.75"	1,065	1-1/2	16.2	208-3-60	4.4	165	1 2 3 4 5 6	1/M4-1.1
EF 4	COOK ACE-D VF 195C17D (VF)	ROOF	800	4000	0.75"	1,065	1-1/2	16.2	208-3-60	4.4	165	1 2 3 4 5 6	1/M4-1.1

EQUIPMENT NOTES:

1. PROVIDE VARI-FLOW PRESSURE CONTROLLER.
2. PROVIDE VARI-FLOW AIR BALANCE KIT.
3. PROVIDE ROOF CURB RCG 28 8H + C + T + N.
4. PROVIDE BACKDRAFT DAMPER AT ROOF OPENING.
5. CONTROLS: EXHAUST FANS TO BE INTERLOCKED WITH FC-1 AND FC-2. EXHAUST FANS TO CONTROL SPACE PRESSURE TO MAXIMUM 0.05" S.P.
6. EXCLUDE WOOD NAILER AND GASKET FOR WOOD NAILER.

GRAVITY VENTILATOR

TAG	MANUFACTURER & MODEL NO.	AREA LOCATION	CFM	ESP	OPR. WT WITH ACCESSORIES (LBS.)	REMARKS (SEE EQUIPMENT NOTES BELOW)	ANCHORAGE DETAIL REFERENCE
GV 1	COOK 36X36 GI	ROOF	8000	0.114"	279	1 2 3	10/M4-1.1
GV 2	COOK 36X36 GI	ROOF	8000	0.114"	279	1 2 3	10/M4-1.1

EQUIPMENT NOTES:

1. PROVIDE ROOF CURB RCG 40X40-18H.
2. PROVIDE ALUMINUM INSECT SCREEN.
3. PROVIDE BACKDRAFT DAMPER AT ROOF OPENING.

HEAT PUMP UNIT SEQUENCE OF OPERATION - RTU-1, FC-1, FC-2

RUN CONDITIONS - SCHEDULED:
THE UNIT SHALL STAGE ITS OWN COOLING AND HEATING COMPONENTS TO MEET THE ZONE TEMPERATURE SETPOINT. THE THERMOSTAT SHALL CONTROL THE UNIT'S SCHEDULING AND MONITOR THE UNIT. THE UNIT SHALL MAINTAIN:

- *A 74°F (ADJ.) COOLING SETPOINT.*
- *A 70°F (ADJ.) HEATING SETPOINT.*

ALARMS SHALL BE PROVIDED AS FOLLOWS:

ZONE TEMP: IF THE ZONE AIR TEMPERATURE IS MORE THAN 3°F (ADJ.) ABOVE OR BELOW SETPOINT FOR MORE THAN 5 MINUTES.

ZONE SETPOINT ADJUST:
THE OCCUPANT SHALL BE ABLE TO ADJUST THE ZONE TEMPERATURE HEATING AND COOLING SETPOINTS AT THE ZONE SENSOR BY ±4°F (ADJ.).

FAN:
THE FAN SHALL RUN ANYTIME THE UNIT IS COMMANDED TO RUN, UNLESS SHUTDOWN ON SAFETIES.
ALARMS SHALL BE PROVIDED AS FOLLOWS:

- *FAN FAILURE: COMMANDED ON, BUT THE STATUS IS OFF.*

FILTER DIFFERENTIAL PRESSURE MONITOR:
THE CONTROLLER SHALL MONITOR THE DIFFERENTIAL PRESSURE ACROSS THE FILTER.
ALARMS SHALL BE PROVIDED AS FOLLOWS:

- *FILTER CHANGE REQUIRED: FILTER DIFFERENTIAL PRESSURE EXCEEDS 0.75"WC (ADJ.) ABOVE THE BASELINE.*

SUPPLY AIR TEMPERATURE:
THE CONTRACTOR SHALL PROVIDE A CONTROLLER TO MONITOR THE SUPPLY AIR TEMPERATURE.
ALARMS SHALL BE PROVIDED AS FOLLOWS:

- *SUPPLY AIR TEMP ALARMS: IF THE SUPPLY AIR TEMPERATURE IS MORE THAN 5°F (ADJ.) ABOVE OR BELOW SETPOINT FOR MORE THAN 5 MINUTES.*

MINIMUM OUTSIDE AIR VENTILATION - CARBON DIOXIDE (CO2) CONTROL:
WHEN IN THE OCCUPIED MODE, THE CONTROLLER SHALL MONITOR ZONE CO2 LEVELS SERVED BY THIS AIR HANDLING UNIT. THE CONTROLLER SHALL TAKE THE HIGHEST ZONE CO2 LEVEL AND MODULATE THE OUTSIDE AIR DAMPERS OPEN ON RISING CO2 CONCENTRATIONS, OVERRIDING NORMAL DAMPER OPERATION TO MAINTAIN A CO2 SETPOINT OF 600 PPM (ADJ.) ABOVE THE AMBIENT CO2 LEVEL.

ECONOMIZER:
THE CONTROLLER SHALL MEASURE THE MIXED AIR TEMPERATURE AND MODULATE THE ECONOMIZER DAMPERS IN SEQUENCE TO MAINTAIN A SETPOINT 2°F (ADJ.) LESS THAN THE SUPPLY AIR TEMPERATURE SETPOINT. THE OUTSIDE AIR DAMPERS SHALL MAINTAIN A MINIMUM OA CFM WHENEVER OCCUPIED.

THE ECONOMIZER SHALL BE ENABLED WHENEVER:

- *OUTSIDE AIR TEMPERATURE IS LESS THAN 72°F (ADJ.).*
- *AND THE OUTSIDE AIR TEMPERATURE IS LESS THAN THE RETURN AIR TEMPERATURE.*
- *AND THE SUPPLY FAN STATUS IS ON.*

THE ECONOMIZER SHALL CLOSE WHENEVER:

- *MIXED AIR TEMPERATURE DROPS TO 35°F (ADJ.) OR LOWER.*

THE OUTSIDE AND EXHAUST AIR DAMPERS SHALL CLOSE AND THE RETURN AIR DAMPER SHALL OPEN WHEN THE UNIT IS OFF.

HP SEQUENCE OF OPERATION | 2

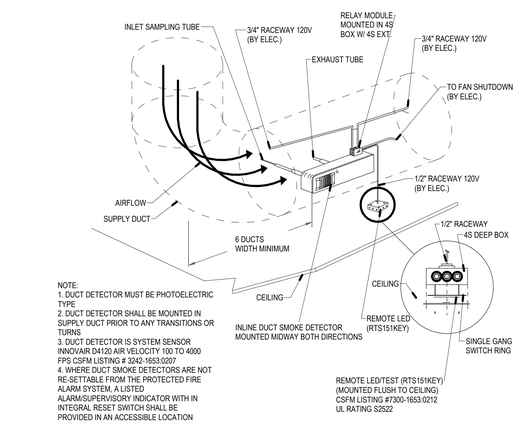

NOTE:
1. DUCT DETECTOR MUST BE PHOTOELECTRIC TYPE
2. DUCT DETECTOR SHALL BE MOUNTED IN SUPPLY DUCT PRIOR TO ANY TRANSITIONS OR TURNS
3. DUCT DETECTOR IS SYSTEM SENSOR INNOVAIR D4120 AIR VELOCITY 100 TO 4000 FPS CSFM LISTING # 3242-1653:0207
4. WHERE DUCT SMOKE DETECTORS ARE NOT RE-SETTABLE FROM THE PROTECTED FIRE ALARM SYSTEM, A LISTED ALARM/SUPERVISORY INDICATOR WITH IN INTEGRAL RESET SWITCH SHALL BE PROVIDED IN AN ACCESSIBLE LOCATION

DUCT DETECTOR | 1

IDENTIFICATION STAMP
DIV. OF THE STATE ARCHITECT
APP: 03-125539 INC:
REVIEWED FOR
SS ☑ FLS ☑ ACS ☐
DATE: 03/27/2026

WESTGROUP DESIGNS
19900 MacArthur Boulevard I Suite 1000
Irvine I California I 92612
949.250.0880 I FAX 949.250.0882
www.westgroupdesigns.com

REGISTERED PROFESSIONAL ENGINEER
STEVEN D. KUYKENDALL
No. 33209
SIGNED:03/19/2026
MECHANICAL
STATE OF CALIFORNIA

412 E. Vanderbilt Way
San Bernardino, CA 92408
Phone: 909.890.3700
Fax: 909.890.3770
Email: cadd@designwesteng.com
DESIGN WEST ENGINEERING
MECHANICAL • ELECTRICAL • ENERGY CONSULTANTS

FILLMORE MIDDLE SCHOOL - BUILDING F - GYM - HVAC REPLACEMENT

FILLMORE UNIFIED SCHOOL DISTRICT
543 A St, Fillmore, CA 93015

ISSUED FOR:
DSA V2 SUBMITTAL 11/21/25

REVISIONS:

REGISTRATION/SIGNATURE:

SHEET TITLE:
MECHANICAL SCHEDULES CONT.

SHEET NUMBER:
M0-0.2

WD PROJ. #	DRAWN BY:	CHECKED	DATE
25817	OB / IC	AO	09/10/25

© WESTGROUP DESIGNS, INC.

25-099

PRINTED: 2/13/2026 10:20:45 AM
PATH: Autodesk Docs://25-099 Fillmore Middle School Gym HVAC Replacement/25-099 Fillmore Middle School Gym HVAC Replacement_MEP_Central_R24.rvt

GENERAL NOTES

1. FOR LINE TYPES, SYMBOLS AND ABBREVIATIONS SEE LEGEND ON SHEET M0-0.1.

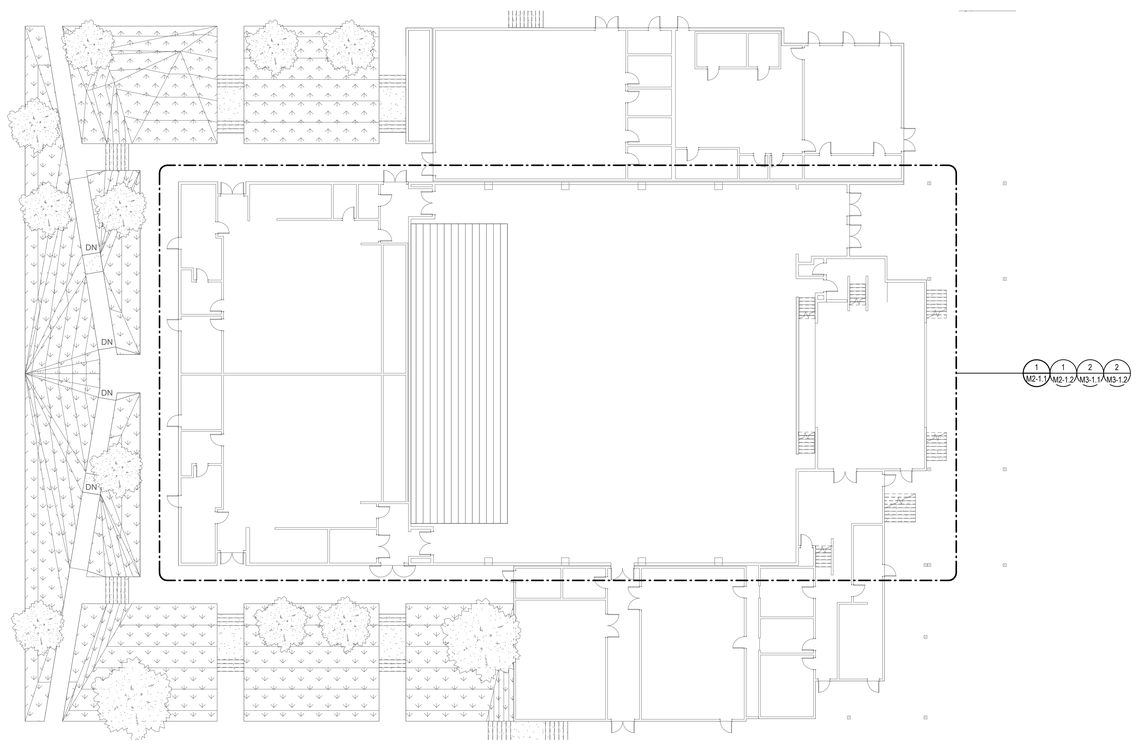

ESTIMATED NORTH ARROW

MECHANICAL SITE PLAN | SCALE: 1/16" = 1'-0" | 1

IDENTIFICATION STAMP
DIV. OF THE STATE ARCHITECT
APP: 03-125539 INC:
REVIEWED FOR
SS ☑ FLS ☑ ACS ☐
DATE: 03/27/2026

WESTGROUP DESIGNS

19900 MacArthur Boulevard I Suite 1000
Irvine I California I 92612
949.250.0880 I FAX 949.250.0882
www.westgroupdesigns.com

REGISTERED PROFESSIONAL ENGINEER
STEVEN D. HUNSAKER
No. 33209
SIGNED:03/19/2026
MECHANICAL
STATE OF CALIFORNIA

412 E. Vanderbilt Way
San Bernardino, CA 92408
Phone: 909.890.3700
Fax: 909.890.3770
Email: cadd@designwesteng.com

DESIGN WEST ENGINEERING
MECHANICAL • ELECTRICAL • ENERGY CONSULTANTS

FILLMORE MIDDLE SCHOOL - BUILDING F - GYM - HVAC REPLACEMENT

FILLMORE UNIFIED SCHOOL DISTRICT

543 A St, Fillmore, CA 93015

ISSUED FOR:
DSA V2 SUBMITTAL 11/21/25

REVISIONS:

REGISTRATION/SIGNATURE:

SHEET TITLE:
MECHANICAL SITE PLAN

SHEET NUMBER:
M1-1.2

WD PROJ. #	DRAWN BY:	CHECKED	DATE
25817	OB / IC	AO	09/10/25

© WESTGROUP DESIGNS, INC.

25-099

PRINTED: 2/13/2026 10:20:46 AM
PATH: Autodesk Docs://25-099 Fillmore Middle School Gym HVAC Replacement/25-099 Fillmore Middle School Gym HVAC Replacement_MEP_Central_R24.rvt

GENERAL NOTES

1. FOR LINE TYPES, SYMBOLS AND ABBREVIATIONS SEE LEGEND ON SHEET M0-0.1.
2. CONTRACTOR SHALL PATCH FLOORS , WALLS, AND CEILINGS TO MATCH NEW CONSTRUCTION PER ARCHITECT'S SPECIFICATIONS.

MECHANICAL DEMOLITION PLAN | SCALE: 1/8" = 1'-0" | 1

IDENTIFICATION STAMP
DIV. OF THE STATE ARCHITECT
APP: 03-125539 INC:
REVIEWED FOR
SS ☑ FLS ☑ ACS ☐
DATE: 03/27/2026

WESTGROUP DESIGNS
19900 MacArthur Boulevard I Suite 1000
Irvine I California I 92612
949.250.0880 I FAX 949.250.0882
www.westgroupdesigns.com

REGISTERED PROFESSIONAL ENGINEER
STEVEN H. JOHNSON
No. 33209
SIGNED:03/13/2026
MECHANICAL
STATE OF CALIFORNIA

412 E. Vanderbilt Way
San Bernardino, CA 92408
Phone: 909.890.3700
Fax: 909.890.3770
Email: cadd@designwesteng.com
DESIGN WEST ENGINEERING
MECHANICAL • ELECTRICAL • ENERGY CONSULTANTS

FILLMORE MIDDLE SCHOOL - BUILDING F - GYM - HVAC REPLACEMENT

FILLMORE UNIFIED SCHOOL DISTRICT

543 A St, Fillmore, CA 93015

ISSUED FOR:
DSA V2 SUBMITTAL 11/21/25

REVISIONS:

REGISTRATION/SIGNATURE:

SHEET TITLE:
MECHANICAL DEMO PLAN - FIRST FLOOR

SHEET NUMBER:
M2-1.1

WD PROJ. #	DRAWN BY:	CHECKED	DATE
25817	OB / IC	AO	09/10/25

© WESTGROUP DESIGNS, INC.

25-099

PRINTED: 2/13/2026 10:20:46 AM
PATH: Autodesk Docs://25-099 Fillmore Middle School Gym HVAC Replacement/25-099 Fillmore Middle School Gym HVAC Replacement_MEP_Central_R24.rvt

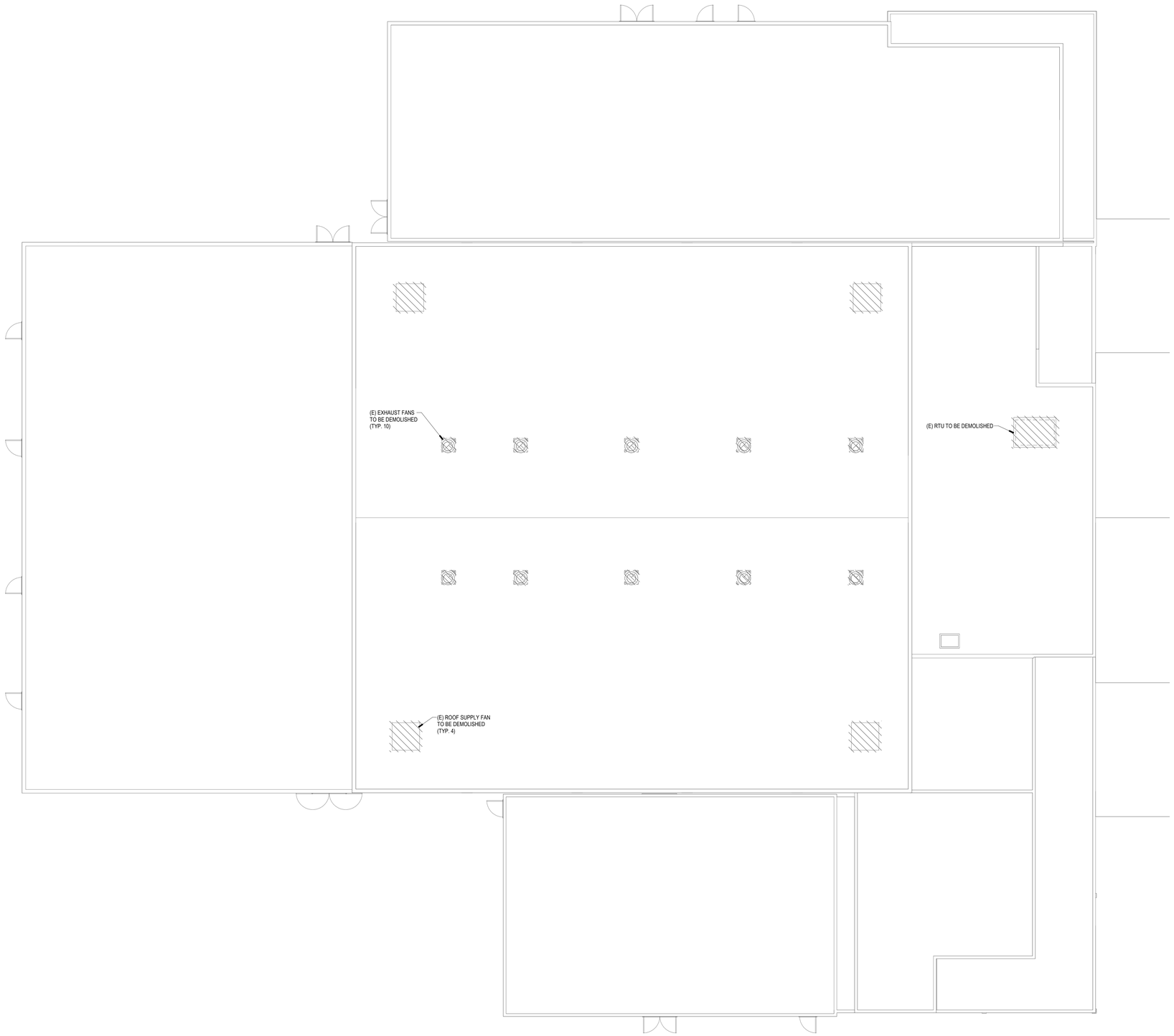

MECHANICAL ROOF DEMOLITION PLAN | SCALE: 1/8" = 1'-0" | 1

GENERAL NOTES

1. FOR LINE TYPES, SYMBOLS AND ABBREVIATIONS SEE LEGEND ON SHEET M0-0.1.
2. CONTRACTOR SHALL PATCH ALL ROOF PENETRATIONS AS NEEDED TO MAINTAIN EXISTING ROOFING WARRANTY.

IDENTIFICATION STAMP
DIV. OF THE STATE ARCHITECT
APP: 03-125539 INC:
REVIEWED FOR
SS ☑ FLS ☑ ACS ☐
DATE: 03/27/2026

WESTGROUP DESIGNS
19900 MacArthur Boulevard I Suite 1000
Irvine I California I 92612
949.250.0880 I FAX 949.250.0882
www.westgroupdesigns.com

REGISTERED PROFESSIONAL ENGINEER
STEVEN H. WILCOXON
No. 33209
SIGNED:03/13/2026
MECHANICAL
STATE OF CALIFORNIA

412 E. Vanderbilt Way
San Bernardino, CA 92408
Phone: 909.890.3700
Fax: 909.890.3770
Email: cadd@designwesteng.com
DESIGN WEST ENGINEERING
MECHANICAL • ELECTRICAL • ENERGY CONSULTANTS

FILLMORE MIDDLE SCHOOL - BUILDING F - GYM - HVAC REPLACEMENT

FILLMORE UNIFIED SCHOOL DISTRICT

543 A St, Fillmore, CA 93015

ISSUED FOR:
DSA V2 SUBMITTAL 11/21/25

REVISIONS:

REGISTRATION/SIGNATURE:

SHEET TITLE:
MECHANICAL DEMOLITION PLAN - ROOF

SHEET NUMBER:
M2-1.2

WD PROJ. #	DRAWN BY:	CHECKED	DATE
25817	OB / IC	AO	09/10/25

© WESTGROUP DESIGNS, INC.

25-099

PRINTED: 2/13/2026 10:20:47 AM
PATH: Autodesk Docs://25-099 Fillmore Middle School Gym HVAC Replacement/25-099 Fillmore Middle School Gym HVAC Replacement_MEP_Central_R24.rvt

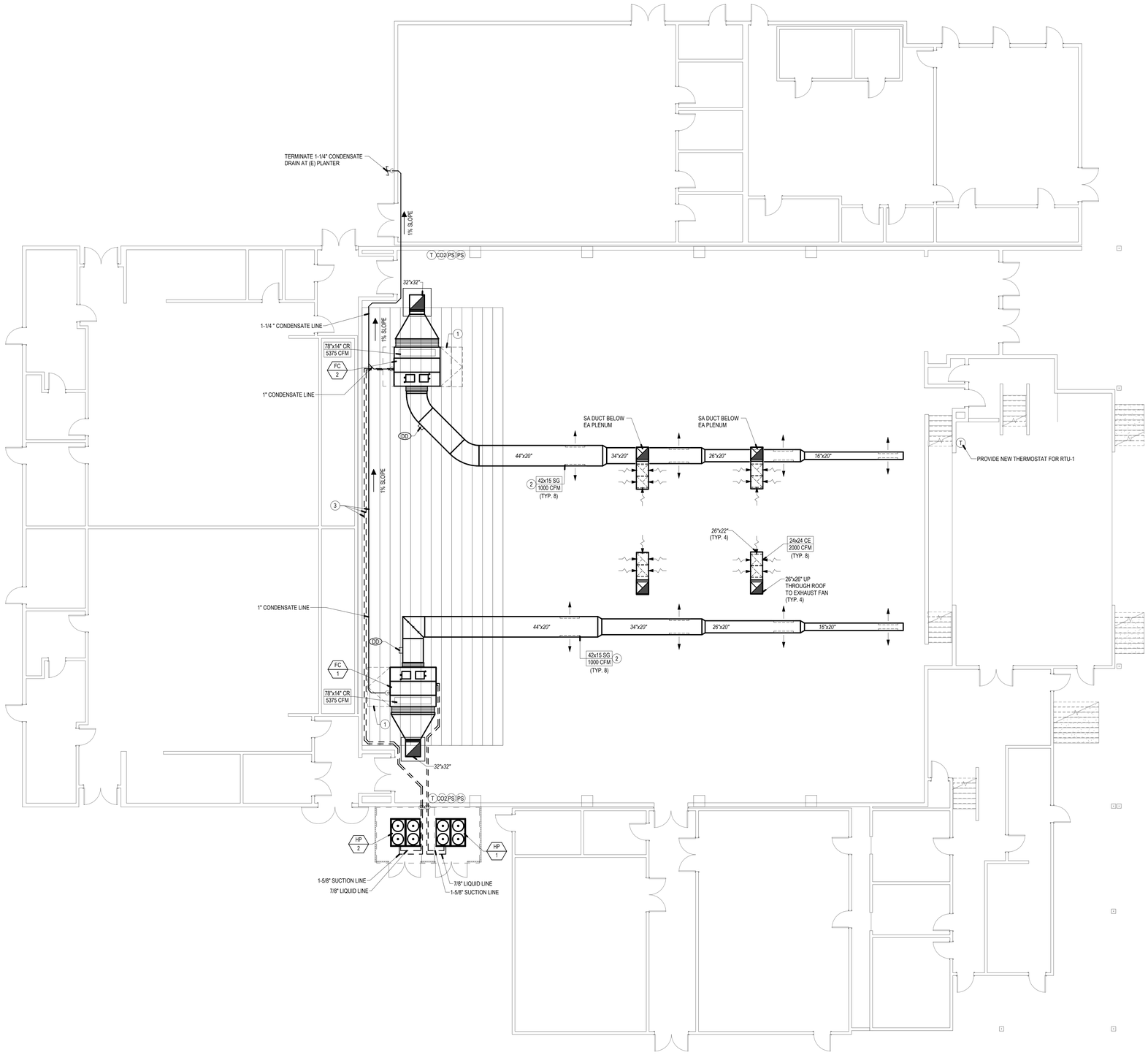

GENERAL NOTES

1. FOR LINE TYPES, SYMBOLS AND ABBREVIATIONS SEE LEGEND ON SHEET M0-0.1.
2. CONTRACTOR SHALL PATCH FLOORS , WALLS, AND CEILINGS TO MATCH NEW CONSTRUCTION PER ARCHITECT'S SPECIFICATIONS.
3. EXISTING RTU DUCTWORK OVER STAGE TO BE CLEANED AND INSPECTED.

CONSTRUCTION NOTES

1. MINIMUM 4'x7' EQUIPMENT ACCESS SPACE.
2. INSTALL DIFFUSER 30 DEGREES DOWN TOWARDS GYM FLOOR.
3. REFRIGERANT AND CONDENSATE LINES TO BE MOUNTED TO CONCRETE WALL. SEE DETAIL 6/M4-1.1.

MECHANICAL PLAN | SCALE: 1/8" = 1'-0" | 2

IDENTIFICATION STAMP
DIV. OF THE STATE ARCHITECT
APP: 03-125539 INC:
REVIEWED FOR
SS ☑ FLS ☑ ACS ☐
DATE: 03/27/2026

WESTGROUP DESIGNS
19900 MacArthur Boulevard I Suite 1000
Irvine I California I 92612
949.250.0880 I FAX 949.250.0882
www.westgroupdesigns.com

REGISTERED PROFESSIONAL ENGINEER
STEVEN HUTCHISON
No. 33209
Exp. 12/31/2026
MECHANICAL
STATE OF CALIFORNIA

412 E. Vanderbilt Way
San Bernardino, CA 92408
Phone: 909.890.3700
Fax: 909.890.3770
Email: cadd@designwesteng.com
DESIGN WEST ENGINEERING
MECHANICAL - ELECTRICAL - ENERGY CONSULTANTS

FILLMORE MIDDLE SCHOOL - BUILDING F - GYM - HVAC REPLACEMENT

FILLMORE UNIFIED SCHOOL DISTRICT

543 A St, Fillmore, CA 93015

ISSUED FOR:
DSA V2 SUBMITTAL 11/21/25

REVISIONS:

REGISTRATION/SIGNATURE:

SHEET TITLE:
MECHANICAL PLAN - FIRST FLOOR

SHEET NUMBER:
M3-1.1

WD PROJ. #	DRAWN BY:	CHECKED	DATE
25817	OB / IC	AO	09/10/25

© WESTGROUP DESIGNS, INC.

25-099

PRINTED: 2/13/2026 10:20:48 AM
PATH: Autodesk Docs://25-099 Fillmore Middle School Gym HVAC Replacement/25-099 Fillmore Middle School Gym HVAC Replacement_MEP_Central_R24.rvt

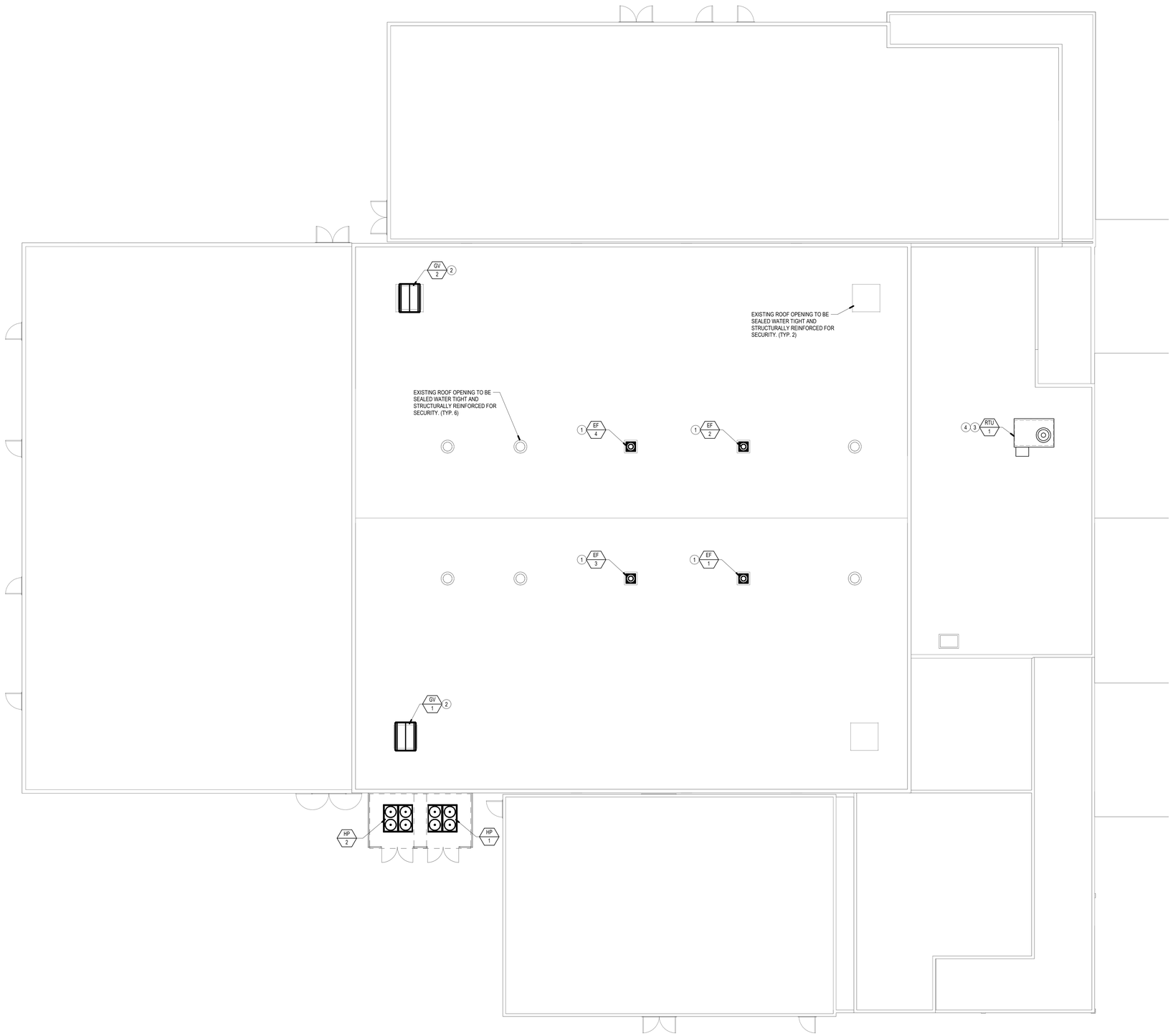

GENERAL NOTES

1. FOR LINE TYPES, SYMBOLS AND ABBREVIATIONS SEE LEGEND ON SHEET M0-0.1.
2. CONTRACTOR SHALL PATCH ALL ROOF PENETRATIONS AS NEEDED TO MAINTAIN EXISTING ROOFING WARRANTY.

CONSTRUCTION NOTES

1. NEW EXHAUST FAN TO MOUNT TO NEW ROOF CURB.
2. NEW GRAVITY INTAKE VENTILATOR TO MOUNT TO NEW ROOF CURB.
3. NEW RTU TO ATTACH TO NEW ROOF CURB.
4. NEW RTU TO CONNECT TO EXISTING DUCTWORK.

MECHANICAL PLAN - ROOF | SCALE: 1/8" = 1'-0" | 2

IDENTIFICATION STAMP
DIV. OF THE STATE ARCHITECT
APP: 03-125539 INC:
REVIEWED FOR
SS ☑ FLS ☑ ACS ☐
DATE: 03/27/2026

WESTGROUP DESIGNS
19900 MacArthur Boulevard I Suite 1000
Irvine I California I 92612
949.250.0880 I FAX 949.250.0882
www.westgroupdesigns.com

REGISTERED PROFESSIONAL ENGINEER
STEVEN D. WHITCOMB
No. 33209
Exp. 12/31/2026
MECHANICAL
STATE OF CALIFORNIA

412 E. Vanderbilt Way
San Bernardino, CA 92408
Phone: 909.890.3700
Fax: 909.890.3770
Email: cadd@designwesteng.com
DESIGN WEST ENGINEERING
MECHANICAL • ELECTRICAL • ENERGY CONSULTANTS

FILLMORE MIDDLE SCHOOL - BUILDING F - GYM - HVAC REPLACEMENT

FILLMORE UNIFIED SCHOOL DISTRICT

543 A St, Fillmore, CA 93015

ISSUED FOR:
DSA V2 SUBMITTAL 11/21/25

REVISIONS:

REGISTRATION/SIGNATURE:

SHEET TITLE:
MECHANICAL PLAN - ROOF

SHEET NUMBER:
M3-1.2

WD PROJ. #	DRAWN BY:	CHECKED	DATE
25817	OB / IC	AO	09/10/25

© WESTGROUP DESIGNS, INC.

25-099

PRINTED: 2/13/2026 10:20:49 AM
PATH: Autodesk Docs://25-099 Fillmore Middle School Gym HVAC Replacement/25-099 Fillmore Middle School Gym HVAC Replacement_MEP_Central_R24.rvt

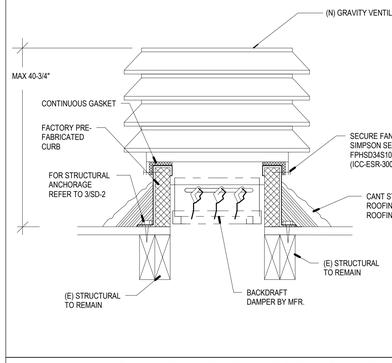

GRAVITY VENTILATOR MOUNTING 10

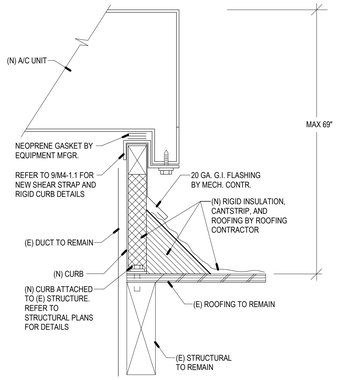

RTU-1 MOUNTING 11

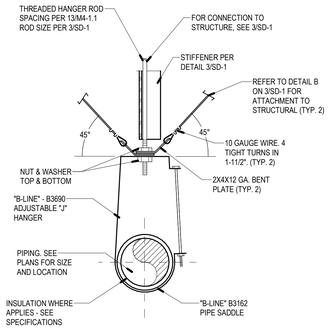

NOTES:

1. DETAIL APPLIES TO PIPES 2" I.D. AND SMALLER
2. REFER TO PIPE SUPPORT SCHEDULE FOR ADDITIONAL INFORMATION

PIPE SUPPORT 12

PIPE SIZE IN INCHES	MAXIMUM SPAN BETWEEN SUPPORT HANGERS O.C.	LONGITUDINAL ANGLE BRACE (1)	TRANSVERSE ANGLE BRACE (1)
COPPER TUBE & PIPE			
1/2 & 3/4	6'-0"	80'-0" O.C.	40'-0" O.C.
1 THRU 1-1/2	6'-0"	80'-0" O.C.	40'-0" O.C.
2	10'-0"	80'-0" O.C.	40'-0" O.C.

NOTES

(1) BRACING MAY BE OMITTED WHERE TOP OF PIPE IS 12" OR LESS TO POINT OF CONNECTION TO STRUCTURE

(2) ALLOW FOR EXPANSION EVERY 30'-0"

PIPE SIZE IN INCHES	COPPER TUBE & PIPE	
	WEIGHT, DRY (LBS/LINEAR FT.)	WEIGHT, W/ WATER (LBS/LINEAR FT.)
1/2	0.285	0.386
3/4	0.455	0.664
1	0.655	1.01
1-1/4	0.884	1.43
1-1/2	1.14	1.91
2	1.75	3.09

PIPE SUPPORT SCHEDULE 13

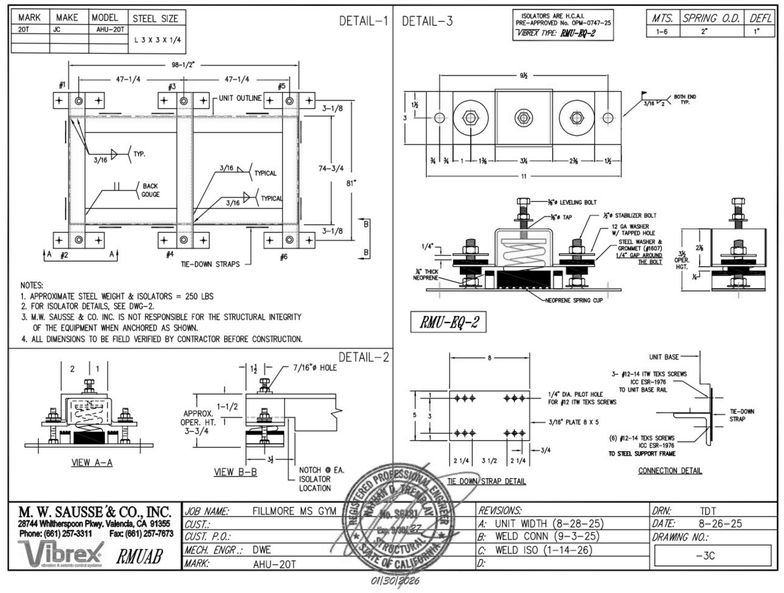

MARK	MAKE	MODEL	STEEL SIZE
20T	JC	AHU-20T	
			L 3 X 3 X 1/4

ISOLATORS ARE H.C.A.I. PRE-APPROVED No. OPA-0747-25
VIBREX TYPE: RMU-EQ-2

MTS.	SPRING O.D.	DEFL
1-6	2"	1"

NOTES:

1. APPROXIMATE STEEL WEIGHT & ISOLATORS = 250 LBS
2. FOR ISOLATOR DETAILS, SEE DWG-2.
3. M.W. SAUSSE & CO. INC. IS NOT RESPONSIBLE FOR THE STRUCTURAL INTEGRITY OF THE EQUIPMENT WHEN ANCHORED AS SHOWN.
4. ALL DIMENSIONS TO BE FIELD VERIFIED BY CONTRACTOR BEFORE CONSTRUCTION.

NOTES:

1. DUCT SUPPORTS NOT SHOWN FOR CLARITY.
2. FOR ANCHORAGE, USE 3/8" DIA. LAG BOLT MIN. 3" PENETRATION IN MIN. 4 X 4 DOUGLAS FIR,

MARK	MAKE	MODEL	CURB WT
10 TON	YORK	KLG120B3	250#

M. W. SAUSSE & CO., INC.
28744 Whitherspoon Pkwy. Valencia, CA 91355
Phone: (661) 257-3311 Fax: (661) 257-7673
Vibrex RMUAB SRC

JOB NAME:	FILLMORE MS GYM	REVISIONS:	DRN: TDT
CUST.:		A: UNIT WIDTH (8-28-25)	DATE: 8-26-25
CUST. P.O.:		B: WELD CONN (9-3-25)	DRAWING NO.:
MECH. ENGR.:	DWE	C: WELD ISO (1-14-26)	-3C
MARK:	AHU-20T	D:	

FC-1 & FC-2 MOUNTING 8

RTU-1 MOUNTING 9

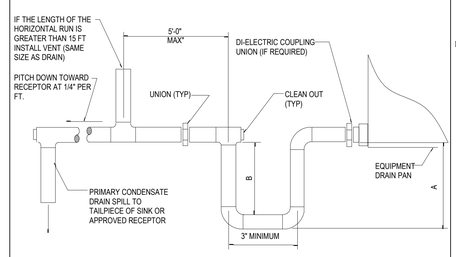

UNIT TYPE	A	B
DRAW THRU	SPx2.5+1"	SPx1.0+1"
BLOW THRU	SPx1.5+2"	SPx1.5+2"

SP = TOTAL STATIC PRESSURE OF A/C UNIT

DRAIN LINE SHALL BE SIZED AS FOLLOWS	
0-20 TONS	3/4"
21-40 TONS	1"
41-90 TONS	1-1/4"
91-125 TONS	1-1/2"
126-250 TONS	2"

* NOT LESS THAN FULL SIZE OF UNIT CONNECTION

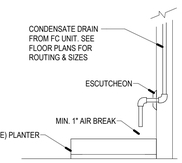

CONDENSATE CONNECTION 5

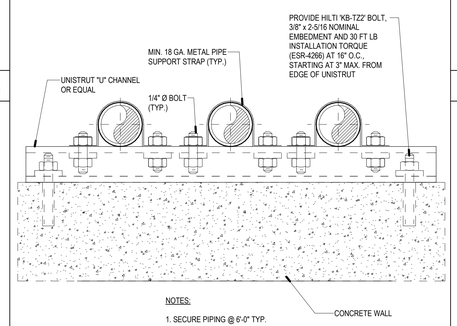

NOTES:

1. SECURE PIPING @ 6'-0" TYP.

WALL MOUNT PIPE SUPPORT 6

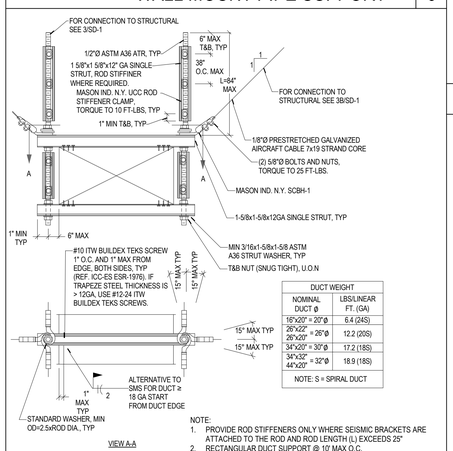

DUCT WEIGHT	
NOMINAL DUCT Ø	LBS/LINEAR FT. (GA)
16"x20" = 20"Ø	6.4 (24S)
26"x22" = 26"Ø 26"x20" = 26"Ø	12.2 (20S)
34"x20" = 30"Ø	17.2 (18S)
34"x32" = 32"Ø 44"x20" = 32"Ø	18.9 (18S)

NOTE: S = SPIRAL DUCT

NOTE:

1. PROVIDE ROD STIFFENERS ONLY WHERE SEISMIC BRACKETS ARE ATTACHED TO THE ROD AND ROD LENGTH (L) EXCEEDS 25"
2. RECTANGULAR DUCT SUPPORT @ 10' MAX O.C.
3. RECTANGULAR DUCT TRANSVERSE CABLE BRACING @ 10'-0" MAX O.C.
4. RECTANGULAR DUCT LONGITUDINAL CABLE BRACING @ 20'-0" MAX O.C.

DUCT SUPPORT - RECT 7

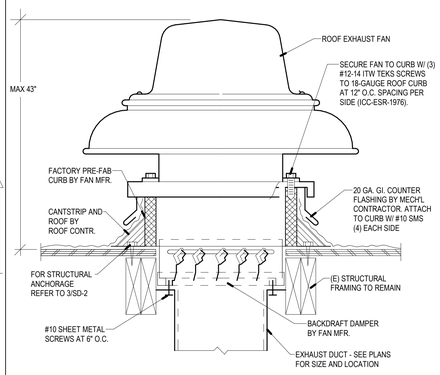

EXHAUST FAN MOUNTING 1

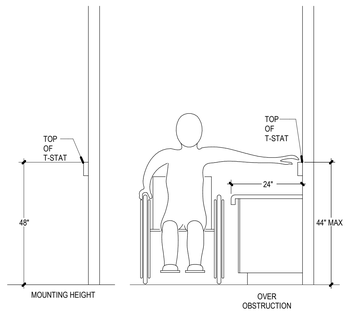

THERMOSTAT MOUNTING 2

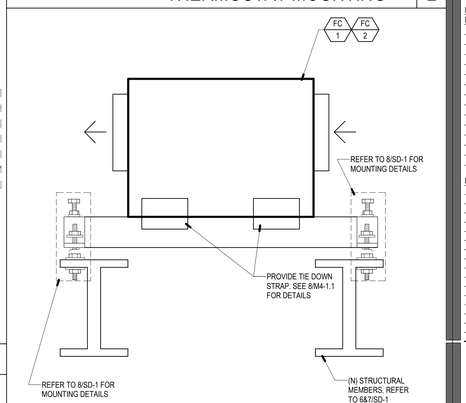

FC-1 & FC-2 MOUNTING 3

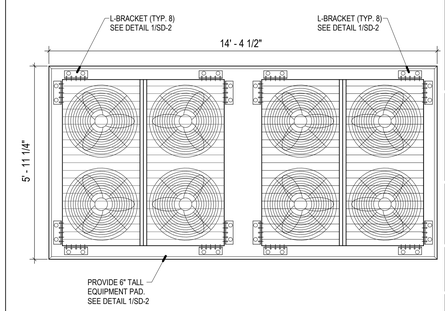

HP-1 & HP-2 MOUNTING 4

IDENTIFICATION STAMP
DIV. OF THE STATE ARCHITECT
APP: 03-125539 INC:
REVIEWED FOR
SS ☑ FLS ☑ ACS ☐
DATE: 03/27/2026

WESTGROUP DESIGNS
19900 MacArthur Boulevard I Suite 1000
Irvine I California I 92612
949.250.0880 I FAX 949.250.0882
www.westgroupdesigns.com

REGISTERED PROFESSIONAL ENGINEER
No. 33209
SIGNED:03/19/2026
MECHANICAL
STATE OF CALIFORNIA

412 E. Vanderbilt Way
San Bernardino, CA 92408
Phone: 909.890.3700
Fax: 909.890.3770
Email: cadd@designwesteng.com
DESIGN WEST ENGINEERING
MECHANICAL - ELECTRICAL - ENERGY CONSULTANTS

FILLMORE MIDDLE SCHOOL - BUILDING F - GYM - HVAC REPLACEMENT

FILLMORE UNIFIED SCHOOL DISTRICT

543 A St, Fillmore, CA 93015

ISSUED FOR:
DSA V2 SUBMITTAL 11/21/25

REVISIONS:

REGISTRATION/SIGNATURE:

SHEET TITLE:
MECHANICAL DETAILS

SHEET NUMBER:
M4-1.1

WD PROJ. #	DRAWN BY:	CHECKED	DATE
25817	OB / IC	AO	09/10/25

© WESTGROUP DESIGNS, INC.

25-099

PRINTED: 2/13/2026 10:20:49 AM
PATH: Autodesk Docs://25-099 Fillmore Middle School Gym HVAC Replacement/25-099 Fillmore Middle School Gym HVAC Replacement_MEP_Central_R24.rvt

STATE OF CALIFORNIA
Mechanical Systems
CALIFORNIA ENERGY COMMISSION

CERTIFICATE OF COMPLIANCE		NRCC-MCH-E
Project Name: 25-099 Fillmore MS	Report Page:	(Page 1 of 11)
Project Address: 543 A St.	Date Prepared:	7/15/2025

This document is used to demonstrate compliance for mechanical systems that are within the scope of the permit application and are demonstrating compliance using the prescriptive path outlined in 140.4, or 141.0(b)2 for alterations.

A. GENERAL INFORMATION

01	Project Location (city)	Fillmore	04 Total Conditioned Floor Area	11758
02	Climate Zone	9	05 Total Unconditioned Floor Area	0
03	Occupancy Types Within Project:		06 # of Stories (Habitable Above Grade)	1

● Classroom ● All Other Occupancies

B. PROJECT SCOPE

This table Includes mechanical systems or components that are within the scope of the permit application and are demonstrating compliance using the prescriptive path outlined in 140.4, 170.2(b) or 141.0(b)2 and 180.2(b)2 for alterations.

01	02	03
Air System(s)	Wet System Components	Dry System Components
☒ Heating Air System	☐ Water Economizer	☒ Air Economizer
☒ Cooling Air System	☐ Pumps	☐ Electric Resistance Heat
Mechanical Controls	☐ System Piping	☒ Fan Systems
☒ Mechanical Controls (existing to remain, altered or new)	☐ Cooling Towers	☐ Ductwork (existing to remain, altered or new)
	☐ Chillers	☒ Ventilation
	☐ Boilers	☐ Zonal Systems/ Terminal Boxes

STATE OF CALIFORNIA
Mechanical Systems
CALIFORNIA ENERGY COMMISSION

CERTIFICATE OF COMPLIANCE		NRCC-MCH-E
Project Name: 25-099 Fillmore MS	Report Page:	(Page 2 of 11)
	Date Prepared:	7/15/2025

C. COMPLIANCE RESULTS

Table C will indicate if the project data input into the compliance document is compliant with mechanical requirements. This table is not editable by the user. If this table says "DOES NOT COMPLY" or "COMPLIES with Exceptional Conditions" refer to Table D., or the table indicated as not compliant for guidance.

01		02		03		04		05		06		07		08	09
System Summary 110.1, 110.2, 140.4, 170.2(c)	AND	Pumps 140.4(k), 170.2(c)4I	AND	Fans/ Economizers 140.4(c), 140.4(e), 170.2(c)	AND	System Controls 110.2, 120.2, 140.4(f), 170.2(c)	AND	Ventilation 120.1, 160.2	AND	Terminal Box Controls 140.4(d), 170.2(c)4B	AND	Distribution 120.3, 140.4(l), 160.2, 160.3	AND	Cooling Towers 110.2(e)2	Compliance Results
(See Table F)		(See Table G)		(See Table H)		(See Table I)		(See Table J)		(See Table K)		(See Table L)		(See Table M)	
Yes	AND		AND	Yes	AND	Yes	AND	Yes	AND		AND		AND		COMPLIES
Mandatory Measures Compliance (See Table Q for Details)										COMPLIES					

D. EXCEPTIONAL CONDITIONS

This table is auto-filled with uneditable comments because of selections made or data entered in tables throughout the form.

E. ADDITIONAL REMARKS

This table includes remarks made by the permit applicant to the Authority Having Jurisdiction.

F. HVAC SYSTEM SUMMARY (DRY & WET SYSTEMS)

Space Conditioning System Information

01	02	03	04	05	06
System Name	Quantity	System Serving	System Status	Space Type	Utilizing Recovered Heat
Gym	2	Single zone	New/ Addition		☐
Stage	1	Single zone	New/ Addition		☐

STATE OF CALIFORNIA
Mechanical Systems
CALIFORNIA ENERGY COMMISSION

CERTIFICATE OF COMPLIANCE		NRCC-MCH-E
Project Name: 25-099 Fillmore MS	Report Page:	(Page 3 of 11)
	Date Prepared:	7/15/2025

F. HVAC SYSTEM SUMMARY (DRY & WET SYSTEMS)

Dry System Equipment Sizing (includes air conditioners, condensers, heat pumps, VRF, furnaces and unit heaters and DOAS systems)

01	02	03	04	05	06	07	08	09	10	11
Name or Item Tag	Equipment Category per Tables 110.2, 140.4(a) and 170.2(c)3aii	Equipment Type per Tables 110.2 and Title 20	Smallest Size Available[1] 140.4(a) and 170.2(c)1	Equipment Sizing per Mechanical Schedule (kBtu/h) 140.4(a&b), 170.2(c)1 & 170.2(c)2						
				Heating Output[2,3]		Cooling Output[2,3]		Load Calculations[3,4]		
				Per Design (kBtu/h)	Rated (kBtu/h)	Supp. Heating Output (kBtu/h)	Sensible Per Design (kBtu/h)	Rated (kBtu/h)	Total Heating Load (kBtu/h)	Total Sensible Cooling Load (kBtu/h)
Gym	Unitary Heat Pumps	Air-cooled, split (3 phase)	Yes	275.34	208.9	0	395.7	164.1	397.76	472.36
Stage	Unitary Heat Pumps	Air-cooled, pkg (3 phase)	Yes	61.55	93.4	0	107.35	106.7	212.83	168.98

[1]FOOTNOTES: Equipment shall be the smallest size, within the available options of the desired equipment line, necessary to meet the design heating and cooling loads of the building per 140.4(a) and 170.2(c)1. Healthcare facilities are excepted.

[2]It is common practice to show rated output capacity on the equipment schedule. Sensible cooling output comes from specification sheet tables.

[3] If equipment is heating only, leave cooling output and load blank. If equipment is cooling only, leave heating output and load blank.

[4] Authority Having Jurisdiction may ask for load calculations used for compliance per 140.4(b) and 170.2(c).

Dry System Equipment Efficiency (other than Package Terminal Air Conditioners (PTAC) and Package Terminal Heat Pumps (PTHP), DX-DOAS and Dual Fuel Heat Pumps)

01	02	03	04	05	06	07	08	09
Name or Item Tag	Size Category (Btu/h)	Heating Mode				Cooling Mode		
		Rating Condition (°F)	Efficiency Unit	Minimum Efficiency Required per Tables 110.2 / Title 20	Design Efficiency	Efficiency Unit	Minimum Efficiency Required per Tables 110.2 / Title 20	Design Efficiency
Gym	>=135,000 and <240,000		COP	3.2	3.3	EER IEER	10.6 13.5	10.5 13.4
Stage	>=65,000 and <135,000		COP	3.4	2.2	EER IEER	11 14.1	11.2 14.4

STATE OF CALIFORNIA
Mechanical Systems
CALIFORNIA ENERGY COMMISSION

CERTIFICATE OF COMPLIANCE		NRCC-MCH-E
Project Name: 25-099 Fillmore MS	Report Page:	(Page 4 of 11)
	Date Prepared:	7/15/2025

G. PUMPS

This section does not apply to this project.

H. FAN SYSTEMS & AIR ECONOMIZERS

This table is used to demonstrate compliance with prescriptive requirements found in 140.4(c), 140.4(e), 140.4(m), 170.2(c)3, and 170.2(c)4A for fan systems. Fan systems serving only process loads are exempt from these requirements and do not need to be included in Table H.

System Name	Gym	Quantity	2	Fan System Status	New	System Zoning	all other systems	Serving Dwelling Units	Not Serving Dwelling Units	Fan System Airflow (cfm)	16,000	Site Elevation	435	Economizer	Fixed Temperature
01	02	03	04			05		06	07	08	09			10	11
Fan Name or Item Tag	Fan Type	Qty	Component			Airflow through Component (%)		Water Gauge (w.g)	Allowance		Design				
									Component Allowance	Fan Allowance (watt/cfm)[3]	Design Electrical Input Power Method			Motor Nameplate Horsepower	Design Electrical Input Power (kW)
SF	Supply	2	Base Allowance for system serving spaces <=6 floors away			100			2048		Manufacturer provided				4.07
			MERV 13-16 Filter upstream of thermal conditioning equipment			100			960						
			Hydronic/DX cooling coil or heat pump coil			100			960						
			Economizer Return Damper			100			320						
Supply Fan Base Allowance (kW)			Exhaust/Return/Relief/Transfer Fan Base Allowance(kW)						Fan System Allowance (kW)[3]		8.58			Fan System Electrical Output (kW)	8.14

STATE OF CALIFORNIA
Mechanical Systems
CALIFORNIA ENERGY COMMISSION

CERTIFICATE OF COMPLIANCE		NRCC-MCH-E
Project Name: 25-099 Fillmore MS	Report Page:	(Page 5 of 11)
	Date Prepared:	7/15/2025

H. FAN SYSTEMS & AIR ECONOMIZERS

System Name	Stage	Quantity	1	Fan System Status	New	System Zoning	all other systems	Serving Dwelling Units	Not Serving Dwelling Units	Fan System Airflow (cfm)	4,000	Site Elevation	435	Economizer	Fixed Temperature
01	02	03	04			05		06	07	08	09			10	11
Fan Name or Item Tag	Fan Type	Qty	Component			Airflow through Component (%)		Water Gauge (w.g)	Allowance		Design				
									Component Allowance	Fan Allowance (watt/cfm)[3]	Design Electrical Input Power Method			Motor Nameplate Horsepower	Design Electrical Input Power (kW)
SF	Supply	1	Base Allowance for system serving spaces <=6 floors away			100			928		Manufacturer provided				2.08
			MERV 13-16 Filter upstream of thermal conditioning equipment			100			556						
			Hydronic/DX cooling coil or heat pump coil			100			556						
			Economizer Return Damper			100			184						
Supply Fan Base Allowance (kW)			Exhaust/Return/Relief/Transfer Fan Base Allowance(kW)						Fan System Allowance (kW)[3]		2.22			Fan System Electrical Output (kW)	2.08

[1] FOOTNOTES: Fans serving spaces with design background noise goals below NC35

[2] Low-turndown single-zone VAV fan system must be capable of and configured to reduce airflow to 50 percent of design airflow and use no more than 30 percent of the design wattage at that airflow. No more than 10 percent of the design load served by the equipment shall have fixed loads.

[3] Fan system allowance includes fan system base allowance.

[4] Filter pressure loss can only be counted once per fan system.

[5] Complex Fan System means a fan system that combines a single cabinet fan system with other supply fans, exhaust fans, or both.

[6] Computer room economizers must meet requirements of 140.9(a) and will be documented on the NRCC-PRC-E document..

H. EXHAUST AIR HEAT RECOVERY 140.4(q), 170.2(c)4O

01	02	03	04	05	06	07	08	09	10	11

STATE OF CALIFORNIA
Mechanical Systems
CALIFORNIA ENERGY COMMISSION

CERTIFICATE OF COMPLIANCE		NRCC-MCH-E
Project Name: 25-099 Fillmore MS	Report Page:	(Page 6 of 11)
	Date Prepared:	7/15/2025

H. EXHAUST AIR HEAT RECOVERY 140.4(q), 170.2(c)4O

Fan System Name	Qty	Hours of Operation per Year	Design Supply Airflow Rate	Outdoor Airflow	% Outdoor Air at Full Design Airflow	Exemptions to Exhaust Air Heat Recovery Requirement per 140.4(q) & 170.2(c)4O	Exhaust Air Heat Recovery 140.4(q) & 170.2(c)4O	Type Of Heat Recovery Rating	Required Recovery Ratio	Energy Recovery Bypass

Fan Energy Index (FEI)

01	02	03
Name or Item Tag	FEI Exception	FEI
Gym	None Applies	1.5
Stage	None Applies	1.5

I. SYSTEM CONTROLS

This table is used to demonstrate compliance with mandatory controls in 110.2 and 120.2 and prescriptive controls in 140.4(f) and (n), 170.2(c)4D 170.2(c)4L or requirements in 141.0(b)2E 180.2(b)2 for altered space conditioning systems.

01	02	03	04	05	06	07	08	09
System Name	System Zoning	Conditioned Floor Area Being Served (ft^2)	Thermostats 110.2(b) & (c)[1], 120.2(a) 160.3(a)2A or 141.0(b)2E & 180.2(b)2	Shut-Off Controls 120.2(e) & 160.3(a)2D	Isolation Zone Controls 120.2(g) & 160.3(a)2F	Demand Response 110.12 120.2(b) & 160.3(a)2B	Supply Air Temp. Reset 140.4(f) & 170.2(c)4D	Window Interlocks per 140.4(n) & 170.2(c)4D
Gym	Single zone	<= 25,000 ft^2	Setback	Auto Timer Switch	NA: Single Zone	DR Tstat per 110.12	Included	NA: No operable windows
Stage	Single zone	<= 25,000 ft^2	Setback	Auto Timer Switch	NA: Single Zone	DR Tstat per 110.12	Included	NA: No operable windows

[1]FOOTNOTES: Gravity gas wall heaters, gravity floor heaters, gravity room heaters, non-central electric heaters, fireplaces or decorative gas appliances, wood stoves are not required to have setback thermostats.

STATE OF CALIFORNIA
Mechanical Systems
CALIFORNIA ENERGY COMMISSION

CERTIFICATE OF COMPLIANCE		NRCC-MCH-E
Project Name: 25-099 Fillmore MS	Report Page:	(Page 7 of 11)
	Date Prepared:	7/15/2025

J. VENTILATION AND INDOOR AIR QUALITY

This table is used to demonstrate compliance with mandatory ventilation requirements in 120.1 120.2(e)38 140.4(p) and 140.4(q) for all nonresidential and hotel/motel and d:\24ref\oilink/{160.2, 160.3(o)3D, 170.2(o)4N, 170.2(p)4O for high-rise residential occupancies. For alterations, only ventilation systems being altered within the scope of the permit application need to be documented in this table. In lieu of this table, the required outdoor ventilation rates and airflows may be shown on the plans or the calculations can be presented in a spreadsheet.

01	☐	Check the box if the project is showing ventilation calculations on the plans, or attaching the calculations instead of completing this table.
02	☒	Check this box if the project included Nonresidential, Hotel/Motel Spaces or Multifamily Common Use Spaces
	☐	
03	☐	Check the box if the project is using natural ventilation in any nonresidential or hotel/motel spaces to meet required ventilation rates per 120.1(c)2.

Nonresidential and Hotel/ Motel Multifamily Common Use Ventilation Systems

04		05			06			07	
System Name	Gym	System Design OA CFM Airflow[1]		5250	System Design Transfer Air CFM		0	Air Filtration per 120.1(c) 141.0(b)2 and 160.2(c)21[2]	
								Provided	
08	09	10	11	12	13	14	15	16	
Space Name or Item Tag	Mechanical Ventilation Required per 120.1(c)3[3] & 160.2(c)3				Exh. Vent per 120.1(c)4 & 160.2(c)4			DCV or Sensor Controls per 120.1(d)3, 120.1(d)5, and 120.1(e)3[6] 160.2(c)5D 160.2(c)5E 160.2(c)5D	
	Occupancy Type[4]	Conditioned Floor Area (ft^2)	# of Shower heads/ toilets	# of people[5]	Required Min OA CFM	Required Min CFM	Provided per Design CFM		
Gym	Assembly- multiuse	10481			5240.5	0	5250	DCV	Provided per §120.1(d)4
								Occ Sensor	NA: Not required space type
17	Total System Required Min OA CFM				5240	18	Ventilation for this System Complies?		Yes
04		05			06			07	
System Name	Stage	System Design OA CFM Airflow[1]		1400	System Design Transfer Air CFM		0	Air Filtration per 120.1(c) 141.0(b)2 and 160.2(c)21[2]	
								Provided	
08	09	10	11	12	13	14	15	16	

STATE OF CALIFORNIA
Mechanical Systems
CALIFORNIA ENERGY COMMISSION

CERTIFICATE OF COMPLIANCE		NRCC-MCH-E
Project Name: 25-099 Fillmore MS	Report Page:	(Page 8 of 11)
	Date Prepared:	7/15/2025

J. VENTILATION AND INDOOR AIR QUALITY

Space Name or Item Tag	Mechanical Ventilation Required per 120.1(c)3[3] & 160.2(c)3					Exh. Vent per 120.1(c)4 & 160.2(c)4		DCV or Sensor Controls per 120.1(d)3, 120.1(d)5, and 120.1(e)3[6] 160.2(c)5D 160.2(c)5E 160.2(c)5D	
	Occupancy Type[4]	Conditioned Floor Area (ft^2)	# of Shower heads/ toilets	# of people[5]	Required Min OA CFM	Required Min CFM	Provided per Design CFM		
Stage	All others	1277			1366.4	0	1400	DCV	NA: Not required per §120.1(d)3
								Occ Sensor	NA: Not required space type
17	Total System Required Min OA CFM				1366	18	Ventilation for this System Complies?		Yes

[1] FOOTNOTES: System CFM should include both mechanical and natural ventilation for the zone/system

[2] Air filtration requirements apply to the following three system types per 120.1(c)1A: space conditioning systems utilizing ducts to supply air to occupiable space; supply-only ventilation systems providing outside air to occupiable space; supply side of balanced ventilation systems including heat recovery and energy recovery ventilation systems providing outside air to occupiable space.

[3] Uniform Mechanical Code may have more stringent ventilation requirements; the most stringent code requirement takes precedence.

[4] See Standards Tables 120.1-A and 120.1-B.

[5] For lecture halls with fixed seating, the expected number of occupants shall be determined in accordance with the California Building Code.

[6] 120.2(e)3 requires systems serving rooms that are required by 130.1(c) to have lighting occupancy sensing controls to also have occupancy sensing zone controls for ventilation. Examples of spaces which require lighting occupancy sensors include offices 250ft^2 or smaller, multipurpose rooms less than 1,000 ft^2, classrooms, conference rooms, restrooms, aisles and open areas in warehouses, library book stack aisles, corridors, stairwells, parking garages, and loading and unloading zones, unless excepted by 130.1(c).

K. TERMINAL BOX CONTROLS

This section does not apply to this project.

L. DISTRIBUTION (DUCTWORK and PIPING)

This section does not apply to this project.

STATE OF CALIFORNIA
Mechanical Systems
CALIFORNIA ENERGY COMMISSION

CERTIFICATE OF COMPLIANCE		NRCC-MCH-E
Project Name: 25-099 Fillmore MS	Report Page:	(Page 9 of 11)
	Date Prepared:	7/15/2025

M. COOLING TOWERS

This section does not apply to this project.

N. DECLARATION OF REQUIRED CERTIFICATES OF INSTALLATION

Selections have been made based on information provided in previous tables of this document. If any selection needs to be changed, please explain why in Table E Additional Remarks. These documents must be provided to the building inspector during construction and can be found online at https://www.energy.ca.gov/title24/2019standards/2019_compliance_documents/Nonresidential_Documents/NRCI/

Form/Title
NRCI-MCH-01-E - Must be submitted for all buildings

O. DECLARATION OF REQUIRED CERTIFICATES OF ACCEPTANCE

Selections have been made based on information provided in previous tables of this document. If any selection needs to be changed, please explain why in Table E Additional Remarks. These documents must be provided to the building inspector during construction and can be found online at https://www.energy.ca.gov/title24/2019standards/2019_compliance_documents/Nonresidential_Documents/NRCA/

Form/Title	Systems/Spaces To Be Field Verified
NRCA-MCH-02-A - Outdoor Air must be submitted for all newly installed HVAC units. Note: MCH-02-A can be performed in conjunction with MCH-07-A Supply Fan VFD Acceptance (if applicable) since testing activities overlap.	York WDZ40C00A2AAA1; York WXE12A2B3AA5A111A1;
NRCA-MCH-03-A - Constant Volume Single Zone HVAC NOTE: This form does not automatically move to "Yes'. If Constant Volume Single Zone HVAC Systems are included in the scope, permit applicant should move this form to "Yes".	York WDZ40C00A2AAA1; York WXE12A2B3AA5A111A1;
NRCA-MCH-05-A - Air Economizer Controls	York WDZ40C00A2AAA1; York WXE12A2B3AA5A111A1;
NRCA-MCH-06-A Demand Control Ventilation Systems must be submitted for all systems required to employ demand controlled ventilation (refer to 120.1(c)3) can vary outside ventilation flow rates based on maintaining interior carbon dioxide (CO_2) concentration setpoints.	York WDZ40C00A2AAA1;
NRCA-MCH-12-A FDD for Packaged Direct Expansion Units	York WDZ40C00A2AAA1; York WXE12A2B3AA5A111A1;

IDENTIFICATION STAMP
DIV. OF THE STATE ARCHITECT
APP: 03-125539 INC:
REVIEWED FOR
SS ☑ FLS ☑ ACS ☐
DATE: 03/27/2026

WESTGROUP DESIGNS
19900 MacArthur Boulevard I Suite 1000
Irvine I California I 92612
949.250.0880 I FAX 949.250.0882
www.westgroupdesigns.com

REGISTERED PROFESSIONAL ENGINEER
STEVEN D. WESTGROUP
No. 33209
Exp.06/30/2026
MECHANICAL
STATE OF CALIFORNIA

412 E. Vanderbilt Way
San Bernardino, CA 92408
Phone: 909.890.3700
Fax: 909.890.3770
Email: cadd@designwesteng.com
DESIGN WEST ENGINEERING
MECHANICAL • ELECTRICAL • ENERGY CONSULTANTS

FILLMORE MIDDLE SCHOOL - BUILDING F - GYM - HVAC REPLACEMENT

FILLMORE UNIFIED SCHOOL DISTRICT

543 A St, Fillmore, CA 93015

ISSUED FOR:
DSA V2 SUBMITTAL 11/21/25

REVISIONS:

REGISTRATION/SIGNATURE:

SHEET TITLE:
T24 COMPLIANCE DOCUMENTS

SHEET NUMBER:
M-5.1

WD PROJ. #	DRAWN BY:	CHECKED	DATE
25817	OB / IC	AO	09/10/25

© WESTGROUP DESIGNS, INC.

25-099

PRINTED: 2/13/2026 10:20:49 AM
PATH: Autodesk Docs://25-099 Fillmore Middle School Gym HVAC Replacement/25-099 Fillmore Middle School Gym HVAC Replacement_MEP_Central_R24.rvt

STATE OF CALIFORNIA
Mechanical Systems
CALIFORNIA ENERGY COMMISSION

CERTIFICATE OF COMPLIANCE		NRCC-MCH-E
Project Name: 25-099 Fillmore MS	**Report Page:**	**(Page 10 of 11)**
	Date Prepared:	7/15/2025

P. DECLARATION OF REQUIRED CERTIFICATES OF VERIFICATION
There are no NRCV forms required for this project.

Q. MANDATORY MEASURES DOCUMENTATION LOCATION		
This table is used to indicate where mandatory measures are documented in the plan set or construction documentation.		
01		02
Compliance with Mandatory Measures documented through MCH Mandatory Measures Note Block	Yes	Plan sheet or construction document location M-Sheets

STATE OF CALIFORNIA
Mechanical Systems
CALIFORNIA ENERGY COMMISSION

CERTIFICATE OF COMPLIANCE		NRCC-MCH-E
Project Name: 25-099 Fillmore MS	**Report Page:**	**(Page 11 of 11)**
Project Address: 543 A St.	**Date Prepared:**	7/15/2025

DOCUMENTATION AUTHOR'S DECLARATION STATEMENT	
I certify that this Certificate of Compliance documentation is accurate and complete.	
Documentation Author Name: Steven Johnson	Documentation Author Signature: Steven Johnson
Company: Design West Engineering	Signature Date:
Address: 412 East Vanderbilt Way	CEA/ HERS Certification Identification (if applicable): 22839
City/State/Zip: San Bernardino CA 92408	Phone: 909-890-3700

RESPONSIBLE PERSON'S DECLARATION STATEMENT

I certify the following under penalty of perjury, under the laws of the State of California:

1. The information provided on this Certificate of Compliance is true and correct.
2. I am eligible under Division 3 of the Business and Professions Code to accept responsibility for the building design or system design identified on this Certificate of Compliance (responsible designer)
3. The energy features and performance specifications, materials, components, and manufactured devices for the building design or system design identified on this Certificate of Compliance conform to the requirements of Title 24, Part 1 and Part 6 of the California Code of Regulations.
4. The building design features or system design features identified on this Certificate of Compliance are consistent with the information provided on other applicable compliance documents, worksheets, calculations, plans and specifications submitted to the enforcement agency for approval with this building permit application.
5. I will ensure that a completed signed copy of this Certificate of Compliance shall be made available with the building permit(s) issued for the building, and made available to the enforcement agency for all applicable inspections. I understand that a completed signed copy of this Certificate of Compliance is required to be included with the documentation the builder provides to the building owner at occupancy.

Responsible Designer Name:	Responsible Designer Signature:
Company:	Date Signed: 2025-07-15
Address:	License:
City/State/Zip:	Phone:

IDENTIFICATION STAMP
DIV. OF THE STATE ARCHITECT
APP: 03-125539 INC:
REVIEWED FOR
SS ☑ FLS ☑ ACS ☐
DATE: 03/27/2026

WESTGROUP DESIGNS
19900 MacArthur Boulevard I Suite 1000
Irvine I California I 92612
949.250.0880 I FAX 949.250.0882
www.westgroupdesigns.com

REGISTERED PROFESSIONAL ENGINEER
STEVEN M. JOHNSON
No. 33209
Exp. 06/30/2026
MECHANICAL
STATE OF CALIFORNIA

412 E. Vanderbilt Way
San Bernardino, CA 92408
Phone: 909.890.3700
Fax: 909.890.3770
Email: cadd@designwesteng.com
DESIGN WEST ENGINEERING
MECHANICAL • ELECTRICAL • ENERGY CONSULTANTS

FILLMORE MIDDLE SCHOOL - BUILDING F - GYM - HVAC REPLACEMENT

FILLMORE UNIFIED SCHOOL DISTRICT

543 A St, Fillmore, CA 93015

ISSUED FOR:
DSA V2 SUBMITTAL 11/21/25

REVISIONS:

REGISTRATION/SIGNATURE:

SHEET TITLE:
T24 COMPLIANCE DOCUMENTS CONT.

SHEET NUMBER:
M-5.2

WD PROJ. #	DRAWN BY:	CHECKED	DATE
25817	OB / IC	AO	09/10/25

© WESTGROUP DESIGNS, INC.

25-099

PRINTED: 2/13/2026 10:20:50 AM
PATH: Autodesk Docs://25-099 Fillmore Middle School Gym HVAC Replacement/25-099 Fillmore Middle School Gym HVAC Replacement_MEP_Central_R24.rvt

ANCHORAGE AND BRACING NOTES

MEP COMPONENT ANCHORAGE NOTE

ALL MECHANICAL, PLUMBING, AND ELECTRICAL COMPONENTS SHALL BE ANCHORED AND INSTALLED PER THE DETAILS ON THE DSA APPROVED CONSTRUCTION DOCUMENTS. WHERE NO DETAIL IS INDICATED, THE FOLLOWING COMPONENTS SHALL BE ANCHORED OR BRACED TO MEET THE FORCE AND DISPLACEMENT REQUIREMENTS PRESCRIBED IN THE 2022 CBC, SECTIONS 1617A.1.18 THROUGH 1617A.1.26 AND ASCE 7-16 CHAPTER 13, 26, 29 AND 30.

1. ALL PERMANENT EQUIPMENT AND COMPONENTS.
2. TEMPORARY OR MOVABLE EQUIPMENT THAT IS PERMANENTLY ATTACHED (E.G. HARD WIRED) TO THE BUILDING UTILITY SERVICES SUCH AS ELECTRICITY, GAS, OR WATER.
3. MOVABLE EQUIPMENT WHICH IS STATIONED IN ONE PLACE FOR MORE THAN 8 HOURS AND HEAVIER THAN 400 POUNDS ARE REQUIRED OR HAS A CENTER OF MASS LOCATED 4 FEET ABOVETHE ADJACENT FLOOR OR ROOF LEVEL THAT DIRECTLY SUPPORT THE DIRECTLY SUPPORT THE COMPONENT ARE REQUIRED TO BE ANCHORED WITH TEMPORARY ATTACHMENTS.

THE FOLLOWING MECHANICAL AND THE ELECTRICAL COMPONENTS SHALL BE POSITIVELY ATTACHED TO THE STRUCTURE, BUT NEED TO BE DETAILED ON THE PLANS. THESE COMPONENTS SHALL HAVE FLEXIBLE CONNECTIONS PROVIDED BETWEEN THE COMPONENT AND THE ASSOCIATED DUCTWORK, PIPING, AND CONDUIT.

A. COMPONENTS WEIGHING LESS THAN 400 POUNDS AND HAVE A CENTER OF MASSLOCATED 4 FEET OR LESS ABOVE THE ADJACENT FLOOR OR ROOF LEVEL THAT DIRECTLY SUPPORT THE COMPONENT.
B. COMPONENTS WEIGHING LESS THAN 20 POUNDS, OR IN THE CASE OF DISTRIBUTED SYSTEMS, LESS 5 POUNDS PER FOOT, WHICH ARE SUSPENDED FROM A ROOF OR FLOOR OR HUNG FROM A WALL.

FOR THOSE ELEMENTS THAT DO NOT REQUIRE DETAILS ON THE APPROVED DRAWINGS, THE INSTALLATION SHALL BE SUBJECT TO THE APPROVAL OF THE DESIGN PROFESSIONAL IN GENERAL RESPONSIBLE CHARGE OR STRUCTURAL ENGINEER DELEGATED RESPONSIBILITY AND THE DSA DISTRICT STRUCTURAL ENGINEER. THE PROJECT INSPECTOR WILL VERIFY THAT ALL COMPONENTS AND EQUIPMENT HAVE BEEN ANCHORED IN ACCORDANCE WITH THE ABOVE REQUIREMENTS.

MEP DISTRIBUTION SYSTEM BRACING NOTE FOR PIPING, DUCTWORK AND ELECTRICAL CONDUIT

PIPING , DUCTWORK, AND ELECTRICAL DISTRIBUTION SYSTEMS SHALL BE BRACED TO COMPLY WITH THE FORCES AND DISPLACEMENTS PRESCRIBED IN ASCE 7 SECTION 13.3 AS DEFINED IN ASCE 7 SECTION 13.6.5, 13.6.6, 13.6.7, AND 13.6.8; AND 2022 CBC SECTIONS 1617A.1.24, 1617A.1.25 AND 1617A.1.26.

THE METHOD OF SHOWING BRACING AND ATTACHMENTS TO THE STRUCTURE FOR THE IDENTIFIED DISTRIBUTION SYSTEMS ARE AS NOTED BELOW. THE MEP DESIGN PROFESSIONAL ENGINEER RESPONSIBLE FOR CONTENT ON THESE SHEETS HAS VERIFIED THAT THE DESIGN METHODS IDENTIFIED BELOW ARE IN ACCORDANCE WITH DSA IR 16-13.

MECHANICAL PIPING (MP), MECHANICAL DUCTS (MD), PLUMBING PIPING(PP), ELECTRICAL DISTRIBUTION SYSTEM (E):

MP☐MD☐PP☐E☒ - OPTION 1: PROJECT-SPECIFIC DESIGN

MP☐MD☐PP☐E☐- OPTION 2: DESIGN BASED ON OSHPD OPM, WITHIN PROJECT SUBMITTAL

MP☐MD☐PP☐E☐ - OPTION 3: DESIGN BASED ON OSHPD OPM, DEFERRED SUBMITTAL

GENERAL NOTES

1. ALL MATERIALS AND WORKMANSHIP SHALL CONFORM TO THE LATEST CODE OF FEDERAL REGULATIONS (CFR), NATIONAL ELECTRICAL CODE EDITION AND ALL APPLICABLE LOCAL CODES AND REGULATIONS.
2. ALL WORK IS NEW UNLESS NOTED OTHERWISE.
3. ALL PANELS, SWITCHES, ETC. SHALL HAVE SUFFICIENT GUTTER SPACE AND LUGS IN COMPLIANCE TO UL REQUIREMENTS TO ACCOMMODATE CONDUCTORS SHOWN.
4. WHERE WIRE SIZES ARE INDICATED ON PLANS, FOR INDIVIDUAL CIRCUITS, THE WIRE SIZE INDICATED SHALL APPLY TO THE COMPLETE CIRCUIT, UNLESS OTHERWISE NOTED.
5. WHERE EXISTING CIRCUITS OR DEVICES ARE DEMOLISHED, MODIFIED, OR REUSED, ENSURE ALL EXISTING ELECTRICAL UTILIZATION DEVICES TO REMAIN ARE ENERGIZED UPON COMPLETION OF WORK.
6. CONTRACTOR SHALL VERIFY THE EXACT LOCATION OF MECHANICAL, PLUMBING AND OTHER EQUIPMENT REQUIRING ELECTRICAL CONNECTION PRIOR TO ANY WORK.
7. CONTRACTOR SHALL EXTEND WIRING FROM ALL JUNCTION BOXES, SWITCHES, ETC. AND MAKE FINAL CONNECTION AS REQUIRED TO ALL BUILDING EQUIPMENT REQUIRING ELECTRICAL CONNECTIONS.
8. LOCATION OF LOCAL WALL SWITCHES ARE SUBJECT TO MODIFICATIONS. AT OR NEAR DOORS, INSTALL SWITCHES ON SIDE OPPOSITE TO DOOR HINGE. VERIFY FINAL HINGE LOCATION IN FIELD PRIOR TO ANY WORK.
9. DRAWINGS ARE DIAGRAMMATIC AND INDICATE GENERAL ARRANGEMENT OF SYSTEMS AND WORK INCLUDED. FOLLOW DRAWINGS IN LAYING OUT WORK AND CHECK DRAWINGS OR OTHER TRADES RELATING TO WORK TO VERIFY SPACE IN WHICH WORK WILL BE INSTALLED. MAINTAIN HEADROOM AND MINIMUM CODE REQUIRED WORKING CLEARANCES AT ALL TIMES.
10. CONTRACTOR SHALL COORDINATE THE LOCATION OF ALL WALL OUTLET BOXES FOR SWITCHES, BELL/STROBES, FIRE ALARM PULL STATIONS. RECEPTACLES ETC. WITH CABINETS, FURNITURE, EQUIPMENT ETC., TO AVOID CONFLICT.
11. FURNISH APPROVED EXPANSION FITTINGS WHERE RACEWAY CROSSES BUILDING EXPANSION JOINTS.
12. FURNISH PULL STRING IN EACH RACEWAY RUN OVER 10' IN LENGTH, IN WHICH PERMANENT WIRING IS NOT INSTALLED.
13. NOT MORE THAN THREE LIGHTING OR CONVENIENCE OUTLET CIRCUITS ARE PERMITTED IN ONE CONDUIT, PROVIDE SEPARATE CONDUIT FOR EACH HOMERUN INDICATED ON THE DRAWING, UNLESS INDICATED OTHERWISE.
14. PROVIDE PULL BOXES WHEREVER NECESSARY TO FACILITATE PULLING OF CONDUCTORS. COORDINATE LOCATIONS OF BOXES WITH OTHER TRADES TO AVOID CONFLICT. PULL BOXES SHALL BE ACCESSIBLE. THE SIZE OF PULL BOX SHALL COMPLY WITH N.E.C. REQUIREMENTS.
15. OUTLET BOXES FOR FIXTURES RECESSED IN HUNG CEILING SHALL BE ACCESSIBLE THROUGH OPENING CREATED BY REMOVAL OF FIXTURES.
16. SEE MECHANICAL AND PLUMBING DRAWINGS AND SPECIFICATION FOR ADDITIONAL CONNECTION REQUIREMENTS TO CONTROL PANELS, CONTROL TRANSFORMERS, POWER FOR CONTROL SYSTEM EP AND PE SWITCHES, TIME CLOCKS, VALVES, STATS, RELAYS, DUCT SMOKE DETECTOR LOCATIONS, ETC. INDICATED ON CONTROL WIRING DIAGRAMS. ELECTRICAL CONTRACTOR SHALL VERIFY FINAL CONTROL WIRING REQUIREMENTS WITH MECHANICAL AND PLUMBING CONTRACTORS PRIOR TO ANY WORK AND PROVIDE ALL NECESSARY DEVICES AND CONNECTIONS AS REQUIRED.
17. ALL EXTERIOR ELECTRICAL DEVICES AND EQUIPMENT INCLUDING THOSE THAT ARE EXPOSED TO OUTSIDE ENVIRONMENT SHALL BE WEATHERPROOF TYPE, NEMA 3R.
18. NO CONDUIT RUNS SHALL BE ALLOWED IN CONCRETE SLABS. ALL CONDUITS WILL BE PLACED ABOVE ACCESSIBLE CEILING SPACES UNLESS SPECIFICALLY INDICATED TO BE UNDERGROUND.
19. LIGHTING, POWER, TELEPHONE AND COMMUNICATIONS OUTLETS SHALL NOT BE PLACED BACK-TO-BACK.
20. DISCONNECT SWITCHES SHALL BE MOUNTED ON INDIVIDUAL SUPPORTS, OR OTHERWISE DIRECTLY ON EQUIPMENT, PROVIDED NO MODIFICATION TO EQUIPMENT IS NECESSARY.
21. ALL ELECTRICAL POWER, LIGHTING, TELEPHONE OR SIGNAL WIRING IN FIRE RATED WALL IS TO BE INSTALLED IN A METALLIC CONDUIT SYSTEM.
22. ALL ELECTRIC MATERIAL SHALL BE LISTED BY "UL" FOR THE TYPE OF APPLICATION AND "UL" LABEL SHALL APPEAR ON ALL ELECTRICAL EQUIPMENT.
23. ALL DISTRIBUTION AND CONTROL EQUIPMENT (SUCH AS CB's, SWITCHES, CONTACTORS, ETC.), TERMINATIONS SHALL BE FULLY RATED PER UL AS FOLLOWS:
    a. 100A OR LESS : 60°C OR MORE;
    b. MORE THAN 100A : 75°C OR MORE.
24. ANY ERRORS, OMISSIONS, OR DESIGN DISCREPANCIES ON PLANS OR SPECIFICATIONS SHALL BE BROUGHT TO THE ATTENTION OF THE ELECTRICAL ENGINEER FOR CLARIFICATION OR CORRECTION PRIOR TO CONSTRUCTION AND PREPARATION OF SUBMITTAL PACKAGES.
25. CONDUCTORS SHALL HAVE UNDERWRITER'S LABORATORIES, INC.(UL) LISTED, 600 VOLT INSULATION OF TYPE SPECIFIED BELOW OR ELSEWHERE IN THE SPECIFICATIONS. CONDUCTORS SHALL BE COPPER AND LISTED FOR 90 DEGREE APPLICATIONS.
    1. BRANCH CIRCUITS - LIGHTING AND POWER.
        a. #10 AWG AND SMALLER, SOLID WIRE TYPE THW OR THHN/THWN-2, THHW(THHN FOR DRY LOCATION ONLY).
        b. #8 AWG TO #2 AWG, STRANDED TYPE THW OR THHN/THHW.
        c. #1 AWG AND LARGER, STRANDED TYPE XHHW-2.
    2. FEEDERS : TYPE THW OR THHN/THWN-2, OR XHHW-2.
26. PROVIDE GREEN INSULATED GROUNDING CONDUCTOR IN EACH RACEWAY INCLUDING CONDUITS, PLUG STRIPS, WIREMOLD. SIZE OF GROUNDING SHALL BE IN ACCORDANCE WITH NATIONAL ELECTRIC CODE ARTICLE 250.
27. WIRING METHOD SHALL BE EMT ABOVE GROUND AND MOUNTED IN CONCEALED SPACES AND SCHEDULE-40 PVC FOR UNDERGROUND INSTALLATION. USE RIGID WHEN ENCASED IN CONCRETE OR SUSCEPTIBLE TO DAMAGE.
28. ALL SWITCH LOCATIONS ARE REQUIRED TO HAVE A NEUTRAL CONDUCTOR PROVIDED AT THE SWITCH LOCATION PER NEC 404.2(C).
29. UNLESS OTHERWISE INDICATED, SHARING OF NEUTRAL/GROUNDED CONDUCTORS AMONG SINGLE PHASE BRANCH CIRCUITS OF DIFFERENT PHASES INSTALLED IN THE SAME RACEWAY IS NOT PERMITTED. PROVIDE DEDICATED NEUTRAL/GROUNDED CONDUCTOR FOR EACH INDIVIDUAL BRANCH CIRCUIT.
30. BASIS OF ELECTRICAL DESIGN LIMITS VOLTAGE DROP TO 2% FOR FEEDERS AND 3% FOR BRANCH CIRCUITS. ANY CHANGES MADE IN THE FIELD SHALL LIMIT VOLTAGE DROP TO THESE PERCENTAGES.
31. BRANCH CIRCUIT CONDUITS SHALL BE CONCEALED IN WALL OR CEILING SPACES. EXPOSED CONDUITS ARE NOT ALLOWED WHERE CONCEALED METHODS ARE AVAILABLE.
32. CONTRACTOR SHALL PROVIDE CONDUCTORS AND CONDUITS REQUIRED FOR ALL BRANCH CIRCUITS AND FEEDERS. FOR CIRCUIT SIZES NOT SHOWN, REFER TO PANEL SCHEDULES FOR CONDUCTOR AND CONDUIT SIZES.
33. THE CONTRACTOR SHALL COORDINATE THE WORK WITH OTHER TRADES. ANY COSTS TO INSTALL WORK TO ACCOMPLISH SAID COORDINATION, WHICH DIFFERS FROM THE WORK AS SHOWN ON THE CONTRACT DOCUMENTS, SHALL BE INCURRED BY THE CONTRACTOR. ANY DISCREPANCIES, AMBIGUITIES OR CONFLICTS SHALL BE BROUGHT TO THE ATTENTION OF THE OWNER'S REPRESENTATIVE DURING BID TIME FOR CLARIFICATION. ANY SUCH CONFLICTS NOT CLARIFIED PRIOR TO BID SHALL BE SUBJECT TO THE INTERRUPTION OF THE OWNER'S REPRESENTATIVE AT NO ADDITIONAL COST TO THE OWNER.
34. EXACT ROUTING METHOD AND LOCATION OF CONDUIT PENETRATION AND OPENINGS IN WOOD ROOF DECKS, WALL, FLOORS OR STRUCTURAL STEEL MEMBERS SHALL BE DETERMINED BY THE CONTRACTOR IN FIELD. PERFORM CORING, SAWCUTTING, PATCHING AND REFINISHING OF EXISTING WALLS AND SURFACES WHEREVER IT IS NECESSARY TO PENETRATE. OPENINGS SHALL BE SEALED IN AN APPROVED METHOD TO MEET THE FIRE RATING AND WATER PROOFING REQUIREMENTS OF THE PARTICULAR WALL, FLOOR OR CEILING. ALL FIRE SEALS SHALL BE UL APPROVED. CONTRACTOR SHALL SCAN ALL CONCRETE WALLS AND SLABS FOR THE PRESENCE OF REBAR AND/OR UTILITIES PRIOR TO DRILLING OR CUTTING IF CONCRETE WORK IS INVOLVED. CONTRACTOR SHALL PROVIDE CERTIFICATION OF CALIBRATION OF CONCRETE SCANNING EQUIPMENT PRIOR TO PERFORMING WORK.
35. ALL 125 AND 250-VOLT, 15- AND 20-AMPERE NONLOCKING TYPE RECEPTACLES SHALL BE LISTED TAMPER RESISTANT RECEPTACLES IN AREAS SPECIFIED IN NEC 406.12.
36. ALL 125-VOLT THROUGH 250-VOLT RECEPTACLES SUPPLIED BY SINGLE-PHASE BRANCH CIRCUITS RATED 150 VOLTS OR LESS TO GROUND, 50 AMPERES OR LESS, AND ALL RECEPTACLES SUPPLIED BY THREE-PHASE BRANCH CIRCUITS RATED 150 VOLTS OR LESS TO GROUND, 100 AMPERES OR LESS, INSTALLED IN THE LOCATIONS SPECIFIED BELOW SHALL HAVE GROUND-FAULT CIRCUIT-INTERRUPTER PROTECTION FOR PERSONNEL AND ANY OTHER AREAS SPECIFIED IN NEC 210.8
    a. BATHROOMS
    b. ROOFTOPS
    c. OUTDOORS
    d. SINKS — WHERE RECEPTACLES ARE INSTALLED WITHIN 6 FT FROM THE TOP
    e. INDOOR DAMP AND WET LOCATIONS

NOTE TO CONTRACTOR

1. IN ADDITION TO NEC, ALL MATERIALS AND WORKMANSHIP SHALL CONFORM TO THE LATEST CALIFORNIA ELECTRICAL CODE OF REGULATIONS (CCR) AND THE CALIFORNIA ELECTRICAL CODE (CEC).

ABBREVIATIONS

A	AMPERE
AF	AMPERE FRAME RATING (CIRCUIT BREAKER)
AFC	AVAILABLE FAULT CURRENT
AFF	ABOVE FINISHED FLOOR
AFG	ABOVE FINISHED GRADE
AFU	AMPHERE FUSE RATING (FUSE)
AIC	AMPHERE INTERRUPTING CAPACITY
AS	AMPERE SWITCH RATING (FUSE)
AT	AMPERE TRIP RATING (CIRCUIT BREAKER)
AWG	AMERICAN WIRE GAUGE
BCG	BARE COPPER GROUND
BKBD	BACKBOARD
BLDG	BUILDING
BKR	BREAKER
C	CONDUIT
CB	CIRCUIT BREAKER
CKT	CIRCUIT
CFSD	COMBINATION FIRE SMOKE DAMPER
CO	CONDUIT ONLY
CONC	CONCRETE
CT	CURRENT TRANSFORMER
CU	COPPER
℄	CENTERLINE
DISC	DISCONNECT
DSBN	DISTRIBUTION SECTION
DN	DOWN
DWG	DRAWING
EA	EACH
EC	ELECTRICAL CONTRACTOR
EM	EMERGENCY
EMT	ELECTRICAL METALLIC TUBING
EPO	EMERGENCY POWER OFF
EXIST, (E)	EXISTING
EXO	EXTERNAL OPERABLE DISCONNECT
F	FUSE
FA	FIRE ALARM
FACP	FIRE ALARM CONTROL PANEL
FF	FINISHED FLOOR
FG	FINISHED GRADE
FLA	FULL LOAD CURRENT
GEC	GROUNDING ELECTRODE CONDUCTOR
GEN	GENERATOR
GFCI	GROUND FAULT CIRCUIT INTERRUPTER
GFP	GROUND FAULT PROTECTION
GND	GROUND
HD	HEAVY DUTY
HOA	HAND-OFF-AUTOMATIC
HP	HORSE POWER
HV	HIGH VOLTAGE
IDF	INTERMEDIATE DISTRIBUTION FRAME
IG	ISOLATED/INSULATED GROUND
ISC	SHORT CIRCUIT CURRENT AVAILABLE IN RMS SYMMETRICAL AMPERES
J-BOX	JUNCTION BOX
KCMIL	THOUSAND CIRCULAR MILS
KW	KILOWATT
KV	KILO VOLT
KVA	KILO VOLT-AMPERE
LDC	LOCAL DISTRIBUTION CABINET
LDF	LOCAL DISTRIBUTION FRAME
LCL	LONG CONTINUOUS LOAD
LFMC	LIQUID TIGHT FLEXIBLE METAL CONDUIT
LSIG	LONG, SHORT, INSTANTANEOUS, GROUND
LTG	LIGHTING
LV	LOW VOLTAGE
MFR	MANUFACTURER
MAX	MAXIMUM
MCC	MOTOR CONTROL CENTER
MIN	MINIMUM
MH	MANHOLE / METAL HALIDE
MLO	MAIN LUGS ONLY
M/M	METER AND MAIN SECTION
MV	MEDIUM VOLTAGE
NC	NORMALLY CLOSED
NEC	NATIONAL ELECTRICAL CODE
NEMA	NATIONAL ELECTRICAL MANUFACTURER'S ASSOCIATION
NEW (N)	NEW, TO BE FURNISHED AND INSTALLED BY CONTRACTOR
NF	NON-FUSED
NIC	NOT IN CONTRACT
N/L	NIGHT LIGHT
NO	NUMBER, NORMALLY OPEN
NTS	NOT TO SCALE
OC	ON CENTER
OD	OUTSIDE DIAMETER
PB	PULL BOX
PF	POWER FACTOR
PNL	PANEL
POC	POINT OF CONNECTION
PP	POWER POLE
PWR	POWER
PVC	POLYVINYL CHLORIDE
QUAD	QUADRUPLEX
QTY	QUANTITY
RGS	RIGID GALVANIZED STEEL
RMC	RIGID METALLIC CONDUIT
RM	ROOM
RNC	RIGID NONMETALLIC CONDUIT
SHT	SHEET
SN	SOLID NEUTRAL
SPEC	SPECIFICATIONS
SW	SWITCH
SWBD	SWITCHBOARD
TC	TIME CLOCK
TEL	TELEPHONE
TERM	TERMINAL
TP	TEMPORARY POLE
TYP	TYPICAL
UGPS	UNDERGROUND PULL SECTION
UL	UNDERWRITERS LABORATORY
UPS	UNINTERRUPTIBLE POWER SUPPLY
UON	UNLESS OTHERWISE NOTED
V	VOLT, VOLTAGE
VA	VOLT-AMPERE
VD	VOLTAGE DROP
VFC	VARIABLE FREQUENCY CONTROLLER
VFD	VARIABLE FREQUENCY DRIVE
W	WATT
WH	WATT-HOUR
WP	WEATHERPROOF
WW	WIREWAY
XP	EXPLOSION PROOF
Z	IMPEDANCE
4W	FOUR-WIRE
3W	THREE-WIRE
5S	JUNCTION BOX (4 11/16" SQUARED X2 1/8" DEEP)
Ø	DIAMETER, PHASE
#	NUMBER
°C	DEGREE CELSIUS
(E)	EXISTING DEVICE TO REMAIN
(R)	REMOVE EXISTING DEVICE AND ASSOCIATED CONDUIT AND WIRE
(RL)	REMOVE EXISTING DEVICE AND RELOCATE AS SHOWN ON PLAN
(NL)	NEW LOCATION OF RELOCATED DEVICE

GENERAL DEMOLITION NOTES

1. THE CONTRACTOR SHALL VISIT THE PROJECT SITE AND MAKE THEMSELVES COMPLETELY FAMILIAR WITH THE EXISTING INSTALLED CONDITIONS. A FIELD SURVEY VERIFICATION IS MANDATORY IN ORDER TO SUBMIT AN ELECTRICAL BID, FAILURE TO DO SO SHALL NOT RELIEVE THIS CONTRACTOR FROM PERFORMING THE WORK OF THIS CONTRACT.
2. ALL EQUIPMENT OR WORK REQUIRED TO CARRY OUT THE DEMOLITION SCOPE OF WORK IS CONSIDERED TO BE PART OF THE CONTRACTOR SCOPE OF WORK. NO EXTRAS WILL BE CONSIDERED TO PERFORM THE REQUIRED WORK.
3. THE CONTRACTOR SHALL OBTAIN WRITTEN PERMISSION FROM THE FACILITY DIRECTOR PRIOR TO THE SCHEDULING OF ANY POWER OUTAGE. SUCH PERMISSION MUST BE OBTAINED IN WRITING AND BE GRANTED AT LEAST 7 DAYS PRIOR TO ANY SCHEDULE SHUT DOWN. THE SHUT DOWN SHALL NOT EXCEED A DURATION OF 4 HOURS.
4. THE CONTRACTOR SHALL NOT STORE ON SITE ANY ITEMS THAT WERE DEMOLISHED FOR ANY EXTENDED PERIOD OF TIME, WITHOUT THE WRITTEN PERMISSION OF THE CAMPUS FACILITY DIRECTOR.
5. ALL ELECTRICAL ITEMS DESIGNATED AS EXISTING TO REMAIN SHALL AS PART OF THIS SCOPE OF WORK BE CLEANED AND TESTED, TO INSURE PROPER OPERATION. ANY ITEMS THAT FAIL TO PASS THE TEST SHALL BE BROUGHT TO THE ATTENTION OF THE FIELD INSPECTOR AND THE ENGINEER OF RECORD FOR RESOLUTION.
6. THE CONTRACTOR SHALL REMOVE ALL EXISTING SWITCHBOARDS, DISTRIBUTION BOARDS, PANEL BOARDS, LIGHTING FIXTURES, CONDUITS, WIRES AND OTHER ELECTRICAL APPARATUS DESIGNATED AS EXISTING TO BE REMOVED. DEMOLITION ITEMS, IF NOT REQUIRED TO BE SALVAGED BY OWNER, BECOME THE PROPERTY OF THE CONTRACTOR AND SHALL BE DISPOSED OF IN AN APPROPRIATE MANNER.
7. THE CONTRACTOR SHALL REMOVE ALL CONDUITS SERVING DEVICES WHICH ARE DESIGNATED AS EXISTING TO BE REMOVED, BACK TO THE SOURCE.
8. DEMOLITION AND/OR REMOVAL OF ELECTRICAL EQUIPMENT IN AREAS TO BE REMODELED SHALL BE THE RESPONSIBILITY OF THE CONTRACTOR.
9. WHERE OUTLETS ARE REMOVED IN EXISTING WALL, REMOVE DEVICES, OUTLETS AND WIRING BACK TO PANELBOARD OR BACK TO NEAREST OUTLET WITH OTHER EXISTING LOAD TO REMAIN.
10. WHERE EXISTING CONDUIT AND CONDUCTORS ARE TO BE REMOVED AND CONDUIT IS INSTALLED IN GROUND OR EMBEDDED IN CONCRETE, REMOVE WIRE AND CUT CONDUIT TO BELOW FLOOR, PLUG CONDUIT, PATCH FLOOR AND ABANDON CONDUIT.
11. WHERE ELECTRICAL DEVICES ARE TO BE REMOVED, REMOVE ALL CONDUIT AND CONDUCTORS BACK TO SOURCE, TERMINAL CABINETS AND RACKS, PROVIDE BLANK COVER PLATE FOR ABANDONED JUNCTION BOXES.
12. REMOVE ALL CONTROL PANELS, EQUIPMENT RACKS, PULL-BOXES, TERMINAL CABINETS, ETC. FOR SYSTEMS TO BE DEMOLISHED EXCEPT WHERE ANY OF THE EXISTING DEVICES, SYSTEMS, CONSOLES, ETC. ARE TO BE REUSED FOR UPGRADE.
13. PROVIDE BLANK COVER PLATE FOR ALL EMPTY OUTLET BOXES WHERE DEVICES AND/OR CONDUCTORS HAVE BEEN REMOVED AS PART OF THIS CONTRACT.
14. AFTER REMOVAL OF WIREMOLD AND ASSOCIATED FITTINGS, PATCH, REPAIR AND PAINT AFFECTED SURFACES TO MATCH EXISTING.
15. EXISTING CONDUIT CAN BE REUSED PROVIDING IT IS CODE COMPLIANT, IS CHECKED FOR CONTINUITY OF GROUND, CLEAN AND MANDREL, AND DOES NOT INTERFERE WITH NEW CONSTRUCTION.
16. REMOVALS AND REPAIRS TO EXISTING ELECTRICAL WORK REQUIRED TO AVOID CONFLICTS WITH NEW CONSTRUCTION TO MEET MINIMUM CODE REQUIREMENTS.

NOTE TO CONTRACTOR

DO NOT SCALE DRAWINGS

CONTRACTOR SHALL VERIFY PLANS AND EXISTING DIMENSIONS AND CONDITIONS ON THE JOB SITE AND SHALL IMMEDIATELY NOTIFY THE ARCHITECT IN WRITING OF ANY DISCREPANCIES BEFORE PROCEEDING WITH THE WORK OR BE RESPONSIBLE FOR THE SAME.

SIGNAL LEGEND AND SYMBOLS

SYMBOL	DESCRIPTION
▽	DATA OUTLET BOX 4S, MOUNTED +15" A.F.F. TO BOTTOM OF DEVICE U.O.N. STUB 3/4" C.O. 6" ABOVE CEILING SPACE, PROVIDE BUSHING AND PULL WIRE. IF INSTALLED IN AREA WITH EXPOSED STRUCTURE ABOVE OR HARD LID CEILING, PROVIDE 3/4" C.O. BACK TO LOCATION OF NEAREST IDF/MDF.
▼W	TELEPHONE OUTLET BOX 4S, MOUNTED +15" A.F.F. TO BOTTOM OF DEVICE U.O.N. STUB 3/4" C.O. 6" ABOVE CEILING SPACE, PROVIDE BUSHING AND PULL WIRE. IF INSTALLED IN AREA WITH EXPOSED STRUCTURE ABOVE OR HARD LID CEILING, PROVIDE 3/4" C.O. BACK TO LOCATION OF NEAREST COMMUNICATIONS CABINET OR TELEPHONE BACKBOARD. "W" INDICATES +42" A.F.F. UNLESS OTHERWISE NOTED.
▽Y	COMBINATION TELEPHONE & DATA OUTLET BOX 4S, MOUNTED +15" A.F.F. TO BOTTOM OF DEVICE U.O.N. STUB 3/4" C.O. 6" ABOVE CEILING SPACE, PROVIDE BUSHING AND PULL WIRE. IF INSTALLED IN AREA WITH EXPOSED STRUCTURE ABOVE OR HARD LID CEILING, PROVIDE 3/4" C.O. BACK TO LOCATION OF NEAREST IDF/MDF, COMMUNICATIONS CABINET, OR TELEPHONE BACKBOARD.
▽Y	COMBINATION TELEPHONE & DATA OUTLET BOX 4S, MOUNTED HEIGHT HORIZONTALLY ABOVE COUNTER TOP PER ARCHITECTURAL PLANS OR APPROVAL STUB 3/4" C.O. 6" ABOVE CEILING SPACE, PROVIDE BUSHING AND PULL WIRE. IF INSTALLED IN AREA WITH EXPOSED STRUCTURE ABOVE OR HARD LID CEILING, PROVIDE 3/4" C.O. BACK TO LOCATION OF NEAREST IDF/MDF, COMMUNICATIONS CABINET, OR TELEPHONE BACKBOARD.

APPLICABLE CODES

1. 2025 BUILDING STANDARDS ADMINISTRATIVE CODE, PART 1, TITLE 24 C.C.R.
2. 2022 CALIFORNIA BUILDING CODE (CBC),PART 2, TITLE 24 C.C.R. (IBC WITH AMENDMENTS)
3. 2022 CALIFORNIA ELECTRICAL CODE (CEC), PART 3, TITLE 24 C.C.R. (NEC WITH AMENDMENTS)
4. 2022 CALIFORNIA MECHANICAL CODE (CMC), PART 4, TITLE 24 C.C.R. (UMC WITH AMENDMENTS)
5. 2022 CALIFORNIA PLUMBING CODE (CPC), PART 5, TITLE 24 C.C.R. (UPC WITH AMENDMENTS)
6. 2022 CALIFORNIA FIRE CODE, PART 9, TITLE 24 C.C.R. (IFC WITH AMENDMENTS)
7. 2022 CALIFORNIA REFERENCED STANDARDS, PART 12, TITLE 24 C.C.R.
8. 2022 TITLE 19 C.C.R., PUBLIC SAFETY, STATE FIRE MARSHAL REGULATIONS.
9. 2022 CALIFORNIA ENERGY CODE (PART 6, TITLE 24 C.C.R.)
10. 2022 CALIFORNIA GREEN BUILDING STANDARDS CODE (CGBSG), PART 11, TITLE 24 C.C.R.

ELECTRICAL SHEET INDEX

SHEET NUMBER	SHEET NAME
E0-0.1	ELECTRICAL LEGENDS & NOTES
E0-0.2	SINGLE LINE DIAGRAM, PANEL SCHEDULES
E2-1.1	DEMOLITION PLAN - FIRST FLOOR
E2-1.2	DEMOLITION PLAN - ROOF
E3-1.1	POWER PLAN - FIRST FLOOR
E3-1.2	POWER PLAN - ROOF
E4-1.1	ELECTRICAL DETAILS

POWER LEGEND AND SYMBOLS

SYMBOL	DESCRIPTION
A-1	SUBSCRIPT "A-1" REFERS TO PANEL DESIGNATION WITH CIRCUIT NUMBER. TYPICAL OF ALL RECEPTACLE OUTLETS.
	DUPLEX RECEPTACLE OUTLET, CONVENIENCE. (20 AMPS, 125 VOLTS) MOUNTED +15" A.F.F. TO BOTTOM OF DEVICE U.O.N.
	DOUBLE DUPLEX RECEPTACLE OUTLET, CONVENIENCE. (20 AMPS, 125 VOLTS) MOUNTED +15" A.F.F. TO BOTTOM OF DEVICE U.O.N.
	DUPLEX RECEPTACLE OUTLET, CONVENIENCE. (20 AMPS, 125 VOLTS, GFCI TYPE) MOUNTED + 15" A.F.F. TO BOTTOM OF DEVICE U.O.N.
	DUPLEX RECEPTACLE OUTLET, CONVENIENCE. (20 AMPS, 125 VOLTS) WITH MOUNTING HEIGHT HORIZONTALLY ABOVE COUNTER TOP PER ARCHITECTURAL PLANS OR APPROVAL.
	DUPLEX RECEPTACLE OUTLET, CONVENIENCE. (20 AMPS, 125 VOLTS, GFCI TYPE) WITH MOUNTING HEIGHT HORIZONTALLY ABOVE COUNTER TOP PER ARCHITECTURAL PLANS OR APPROVAL.
	CA TITLE 24 COMPLIANT DUPLEX RECEPTACLE OUTLET, HALF-CONTROLLED, CONVENIENCE, WITH PERMANENT MARKING. (20 AMPS, 125 VOLTS) MOUNTED +15" A.F.F. TO BOTTOM OF DEVICE U.O.N.
	CA TITLE 24 COMPLIANT DOUBLE DUPLEX RECEPTACLE OUTLET, HALF-CONTROLLED, CONVENIENCE, WITH PERMANENT MARKING. (20 AMPS, 125 VOLTS) MOUNTED +15" A.F.F. TO BOTTOM OF DEVICE U.O.N.
	SIMPLEX RECEPTACLE OUTLET, CONVENIENCE WITH (2) USB PORTS. (20 AMPS, 125 VOLTS) MOUNTED +15" A.F.F. TO BOTTOM OF DEVICE U.O.N. LEVITON MODEL #T5832.
WP	WEATHERPROOF DUPLEX RECEPTACLE OUTLET, CONVENIENCE. (20 AMPS, 125 VOLTS) MOUNTED +15" A.F.F. TO BOTTOM OF DEVICE U.O.N.
	DUPLEX RECEPTACLE OUTLET, SINGLE SPLIT-CIRCUIT SWITCHED. (20 AMPS, 125 VOLTS) MOUNTED +15" A.F.F. TO BOTTOM OF DEVICE U.O.N.
	SURFACE MOUNTED DUPLEX RECEPTACLE OUTLET, CONVENIENCE. (20 AMPS, 125 VOLTS) MOUNTED +15" A.F.F. TO BOTTOM OF DEVICE U.O.N.
	RECESSED CEILING MOUNTED DUPLEX RECEPTACLE OUTLET, CONVENIENCE. (20 AMPS, 125 VOLTS) U.O.N.
J	ABOVE CEILING, CONCEALED, JUNCTION BOX, WITH COVER, PER NATIONAL ELECTRICAL CODE (NEC) TABLE 370-b(a), 4" SQUARE DEEP, WITH PLASTER RING
J	RECESSED WALL MOUNTED, JUNCTION BOX, WITH COVER, PER NATIONAL ELECTRICAL CODE (NEC) TABLE 314.16(A)(B), 4" SQUARE DEEP, WITH PLASTER RING
	DUPLEX RECEPTACLE FLUSH IN FLOOR, WATERTIGHT JUNCTION BOX, (HINGED BRASS COVER: 20 AMP, 120 VOLT, 2-POLE, 3-WIRE) U.O.N.
	DOUBLE DUPLEX RECEPTACLE, FLUSH IN FLOOR, WATERTIGHT JUNCTION BOX (20 AMP, 120 VOLT, 2-POLE, 3-WIRE) U

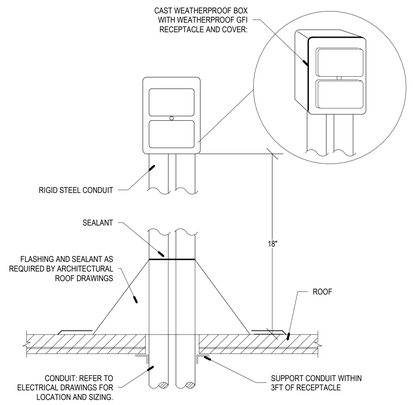

ROOF PENETRATION W/ RECEPTACLE | 4

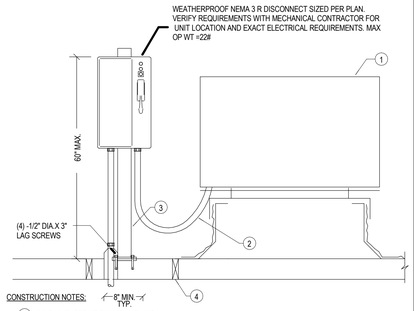

CONSTRUCTION NOTES:

1. HVAC UNIT (SEE MECHANICAL PLANS.)
2. SEALTITE WEATHERPROOF FLEXIBLE CONDUIT CONNECTION. MAX.LENGTH 6FT.
3. ORBIT PREFAB PEDESTAL & BASE PLATE
4. 4X6 BLKG WITH SIMP A35 EA SIDE EA END, TYP @ANCHOR LOCS

MECHANICAL UNIT DISCONNECT | 3

(E) MAIN SWITCHBOARD 'MS'

1600A 480/277V 3Ø 4W 50KAIC

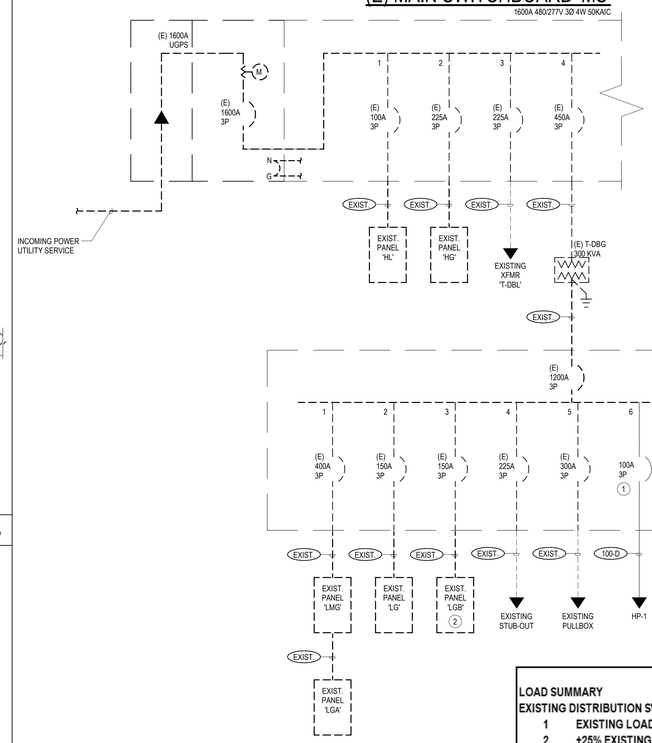

LOAD SUMMARY EXISTING DISTRIBUTION SWITCHBOARD ' DBG '		LOAD VA	LOAD AMPS
1	EXISTING LOAD*	9303	26
2	+25% EXISTING LOAD PER NEC 220.87	2326	6
3	REMOVED IR HEATERS	-2650	-7
4	REMOVED OUTLETS	-720	-2
5	REMOVED ROOF SUPPLY FANS	-10800	-30
6	REMOVED ROOF EXHAUST FANS	-8300	-23
7	NEW HP-1	27108	75
8	NEW HP-2	27108	75
9	NEW FC-1	43488	121
10	NEW FC-2	43488	121
11	NEW RTU-1	44208	123
12	NEW RTU-1 POWER EXHAUST	2016	6
13	NEW EF-1	1584	4
14	NEW EF-2	1584	4
15	NEW EF-3	1584	4
16	NEW EF-4	1584	4
TOTAL LOAD INCLUDING NEC DEMAND FACTORS:		182911	508
208Y/120V 3PH 4W			
EXISTING SWITCHBOARD RATED:			1200

*EXISTING LOAD BASED ON PANEL READING 2025-11-25 TO 2025-12-25

SINGLE LINE DIAGRAM | 1

PANEL LG

(EXISTING)

LOCATION: ELEC. RM.

MOUNTING: RECESSED
FED FROM: (E) 'DBG'
NEMA: 1
AIC RATING: EXIST.

VOLTAGE: 208Y/120V 3PH 4W
BUS: 150 A
MAIN: 150A
FEEDER: EXIST.

NOTE	DESCRIPTION	TYPE	POLES	AMP	AWG /PH	DIST	V.D. %	C.		A		B		C			C.	V.D. %	DIST	AWG /PH	AMP	POLES	TYPE	DESCRIPTION	NOTE
1	GYM WINCH	--	1	20 A	--	--	0	--	1	1248	0					2	--	0	--	--	20 A	1	--	SPARE	
1	GYM WINCH	--	1	20 A	--	--	0	--	3			1248	0			4	--	0	--	--	20 A	1	--	SPARE	
1	GYM WINCH	--	1	20 A	--	--	0	--	5					1248	0	6	--	0	--	--	20 A	1	--	SPARE	
1	GYM WINCH	--	1	20 A	--	--	0	--	7	1248	0					8	--	0	--	--	20 A	1	--	SPARE	
	SPARE	--	1	20 A	--	--	0	--	9			0	800			10	--	0	--	--	20 A	1	--	FLOOR BOX	1
1	FLOOR BOX	--	1	20 A	--	--	0	--	11					800	800	12	--	0	--	--	20 A	1	--	FLOOR BOX	1
1	FLOOR BOX	--	1	20 A	--	--	0	--	13	800	0					14	--	0	--	--	20 A	1	--	SPARE	
1	SCOREBOARD, GYM REC	--	1	20 A	--	--	0	--	15			1520	0			16	--	0	--	--	20 A	1	--	SPARE	
1	SCOREBOARD, GYM REC	--	1	20 A	--	--	0	--	17					1520	0	18	--	0	--	--	20 A	1	--	SPARE	
1	PLATFORM, WORK ROOM...	--	1	20 A	--	--	0	--	19	1440	0					20	--	0	--	--	20 A	1	--	SPARE	
1	OFFICE, GIRLS DRESSING...	--	1	20 A	--	--	0	--	21			1260	0			22	--	0	--	--	20 A	1	--	SPARE	
	SPARE	--	1	20 A	--	--	0	--	23					0	0	24	--	0	--	--	20 A	1	--	SPARE	
	SPARE	--	1	20 A	--	--	0	--	25	0	0					26	--	0	--	--	20 A	1	--	SPARE	
	SPARE	--	1	20 A	--	--	0	--	27			0	530			28	--	0	--	--	20 A	2	--	WHEELCHAIR LIFT	1
1	WHEELCHAIR LIFT	--	2	20 A	--	--	0	--	29					530	530	30									
									31	530	720					32	--	0	--	--	20 A	1	--	OUTLET ROOM 102	1
1	STAGE LIGHTS	--	1	20 A	--	--	0	--	33			1200	0			34	--	0	--	--	20 A	1	--	SPARE	
1	PAVILION LIGHTS	--	1	20 A	--	--	0	--	35					1800	0	36	--	0	--	--	20 A	1	--	SPARE	
	SPARE	--	1	20 A	--	--	0	--	37	0	0					38	--	0	--	--	20 A	1	--	SPARE	
1	STORAGE LIGHTS	--	1	20 A	--	--	0	--	39			600	400			40	--	0	--	--	20 A	1	--	AMP / TUNER	1
	SPARE	--	1	20 A	--	--	0	--	41					0	0	42	--	0	--	--	20 A	1	--	SPARE	
										SUBTOTALS		*5986 VA*		*7558 VA*		*7228 VA*									

DEMAND FACTORS: LOAD TYPE	CONNECTED VA	DEMAND FACTOR	DEMAND VA	DEMAND AMPS
(L) LIGHTING		1.25		
(R) RECEPTACLES		NEC 220.44		
(M) MOTOR		1.25		
LARGEST MOTOR		0.25		
(C) CONTINOUS		1.25		
(N) NON-CONTINOUS		1.00		
(K) KITCHEN (NEC 220.56)		0.65		
(S) SPECIAL DEMAND		1.00		
EXISTING LOAD	20772 VA	NEC 220.87	25965 VA	72 A
TOTALS	20772 VA		25965 VA	
TOTAL AMPS AT 208Y/120V 3PH 4W WITH LCL:				72 A

SUBTOTAL	PHASE
5986 VA	A
7558 VA	B
7228 VA	C
20772 VA	TOTAL
58 A	AMPS

NOTES:
1. EXISTING BREAKER, EXISTING LOAD.

PANEL LGB

(EXISTING)

LOCATION: ELEC. RM.

MOUNTING: SURFACE
FED FROM: (E) 'DBG'
NEMA: 1
AIC RATING: EXIST.

VOLTAGE: 208Y/120V 3PH 4W
BUS: 150 A
MAIN: M.L.O.
FEEDER: EXIST.

NOTE	DESCRIPTION	TYPE	POLES	AMP	AWG /PH	DIST	V.D. %	C.		A		B		C			C.	V.D. %	DIST	AWG /PH	AMP	POLES	TYPE	DESCRIPTION	NOTE
									1	1056	1056					2									
3	EF - 2 & EF - 4	N	3	20 A		146'	1.29		3			1056	1056			4		1.79	122'		20 A	3	N	EF - 1 & EF - 3	3
									5					1056	1056	6									
4	EXTERIOR RECEPTACLE	N	1	20 A		103'	0.51		7	180	360					8		1.28	128'		20 A	1	N	ROOFTOP RECEPTACLES	3
1	CU - 2	--	3	40 A	--	--	0	--	9			1632	0			10	--	0	--	--	20 A	1	--	SPARE	2
									11					1632	0	12	--	0	--	--	20 A	1	--	SPARE	
									13	1632	0					14	--	0	--	--	20 A	1	--	SPARE	
1	DEFROST	--	2	20 A	--	--	0	--	15			200	0			16	--	0	--	--	20 A	1	--	SPARE	
									17					200	0	18	--	0	--	--	20 A	1	--	SPARE	
1	CC - 1 COOLING COIL	--	1	20 A	--	--	0	--	19	180	0					20	--	0	--	--	20 A	1	--	SPARE	
1	GYM WINCH	--	1	20 A	--	--	0	--	21			1248	1248			22	--	0	--	--	20 A	1	--	GYM WINCH	1
1	GYM WINCH	--	1	20 A	--	--	0	--	23					1248	1248	24	--	0	--	--	20 A	1	--	GYM WINCH	1
1	IRH - 11	--	1	20 A	--	--	0	--	25	1440	1440					26	--	0	--	--	20 A	1	--	IRH - 12	1
1	IRH - 12	--	1	20 A	--	--	0	--	27					1440	1440	28	--	0	--	--	20 A	1	--	IRH - 11	1
1	PLATFORM OUTLETS	--	1	20 A	--	--	0	--	29							30	--	0	--	--	20 A	1	--	SPARE	
	SPARE	--	1	20 A	--	--	0	--	31	0	0					32	--	0	--	--	20 A	1	--	SPARE	
	SPARE	--	1	20 A	--	--	0	--	33			0	0			34	--	0	--	--	20 A	1	--	SPARE	
	SPARE	--	1	20 A	--	--	0	--	35					0	0	36	--	0	--	--	20 A	1	--	SPARE	
	SPARE	--	1	20 A	--	--	0	--	37	0	0					38	--	0	--	--	20 A	1	--	SPARE	
	SPARE	--	1	20 A	--	--	0	--	39			0	0			40	--	0	--	--	20 A	1	--	SPARE	
	SPARE	--	1	20 A	--	--	0	--	41					0	0	42	--	0	--	--	20 A	1	--	SPARE	
										SUBTOTALS		*7344 VA*		*9320 VA*		*6440 VA*									

DEMAND FACTORS: LOAD TYPE	CONNECTED VA	DEMAND FACTOR	DEMAND VA	DEMAND AMPS
(L) LIGHTING		1.25		
(R) RECEPTACLES		NEC 220.44		
(M) MOTOR		1.25		
LARGEST MOTOR		0.25		
(C) CONTINOUS		1.25		
(N) NON-CONTINOUS	6876 VA	1.00	6876 VA	19 A
(K) KITCHEN (NEC 220.56)		0.65		
(S) SPECIAL DEMAND		1.00		
EXISTING LOAD	16228 VA	NEC 220.87	20285 VA	56 A
TOTALS	23104 VA		27161 VA	
TOTAL AMPS AT 208Y/120V 3PH 4W WITH LCL:				75 A

SUBTOTAL	PHASE
7344 VA	A
9320 VA	B
6440 VA	C
23104 VA	TOTAL
64 A	AMPS

NOTES:
1. EXISTING BREAKER, EXISTING LOAD.
2. EXISTING BREAKER, REMOVED LOAD.
3. NEW BREAKER, NEW LOAD.
4. EXISTING BREAKER, NEW LOAD.

PANEL LMG

(EXISTING)

LOCATION: ELEC. RM.

MOUNTING: SURFACE
FED FROM: (E) 'DBG'
NEMA: 1
AIC RATING: EXIST.

VOLTAGE: 208Y/120V 3PH 4W
BUS: 400 A
MAIN: 400A
FEEDER: EXIST.

NOTE	DESCRIPTION	TYPE	POLES	AMP	AWG /PH	DIST	V.D. %	C.		A		B		C			C.	V.D. %	DIST	AWG /PH	AMP	POLES	TYPE	DESCRIPTION	NOTE
									1	6020	3228					2									
1	AC - 3	--	3	80 A	--	--	0	--	3			6020	3228			4	--	0	--	--	60 A	3	--	AC - 4	1
									5					6020	3228	6									
	SPARE	--	3	125 A	--	--	0	--	7	0	1000					8	--	0	--	--	30 A	1	--	HONEYWELL	1
									9			0	1000			10	--	0	--	--	30 A	1	--	HONEYWELL	1
									11					0	0	12	--	0	--	--	20 A	1	--	SPARE	
1	FUTURE J-BOX ROOM 108	--	2	40 A	--	--	0	--	13	0	1500					14	--	0	--	--	20 A	2	--	WATER HEATER	1
									15			0	1500			16									
1	FUTURE J-BOX ROOM 108	--	2	20 A	--	--	0	--	17					0	0	18	--	0	--	--	20 A	1	--	SPARE	
									19	0	3000					20	--	0	--	--	30 A	2	--	WATER HEATER	1
1	SPARE	--	1	30 A	--	--	0	--	21			0	3000			22									
1	PAVILION GFCIS	--	1	20 A	--	--	0	--	23					540	360	24	--	0	--	--	20 A	1	--	GYM RECEPTS	1
1	SPARE	--	1	20 A	--	--	0	--	25	0	0					26	--	0	--	--	20 A	1	--	SPARE	2
1	SPARE	--	1	20 A	--	--	0	--	27			0	180			28	--	0	--	--	20 A	1	--	UNIT 4 RECEPT	1
1	IFI GYM HEATER	--	1	20 A	--	--	0	--	29					360	0	30	--	0	--	--	20 A	1	--	SPARE	
2	SPARE	--	1	20 A	--	--	0	--	31	0	0					32									
2	SPARE	--	1	20 A	--	--	0	--	33			0	0			34	--	0	--	--	30 A	3	--	SPARE	
	SPARE	--	1	20 A	--	--	0	--	35					0	0	36									
									37	7000	0					38									
1	PANEL 'LGA'	--	3	150 A	--	--	0	--	39			7000	0			40	--	0	--	--	125 A	3	--	SPARE	
									41					7000	0	42									
										SUBTOTALS		*21748 VA*		*21928 VA*		*17508 VA*									

DEMAND FACTORS: LOAD TYPE	CONNECTED VA	DEMAND FACTOR	DEMAND VA	DEMAND AMPS
(L) LIGHTING		1.25		
(R) RECEPTACLES		NEC 220.44		
(M) MOTOR		1.25		
LARGEST MOTOR		0.25		
(C) CONTINOUS		1.25		
(N) NON-CONTINOUS		1.00		
(K) KITCHEN (NEC 220.56)		0.65		
(S) SPECIAL DEMAND		1.00		
EXISTING LOAD	61184 VA	NEC 220.87	76480 VA	212 A
TOTALS	61184 VA		76480 VA	
TOTAL AMPS AT 208Y/120V 3PH 4W WITH LCL:				212 A

SUBTOTAL	PHASE
21748 VA	A
21928 VA	B
17508 VA	C
61184 VA	TOTAL
170 A	AMPS

NOTES:
1. EXISTING BREAKER, EXISTING LOAD.
2. EXISTING BREAKER, REMOVED LOAD.

PANEL SCHEDULES | 2

GENERAL NOTES

1. REFER TO 'GENERAL NOTES' ON ELECTRICAL LEGENDS AND NOTES SHEET FOR WIRING METHODS, MATERIALS, AND REQUIREMENTS.
2. ALL CIRCUIT BREAKERS, PANELBOARDS AND TRANSFORMERS SHALL BE OF THE SAME MANUFACTURER.
3. AVAILABLE FAULT AT SERVICE POINT SHALL BE CONSIDERED AT 30,000 RMS SYM.
4. ALL PANELBOARDS SHALL BE FULLY RATED FOR THE AVAILABLE FAULT UNLESS OTHERWISE NOTED.
5. THE FEEDER LENGTHS SHOWN ON THESE DRAWINGS ARE FOR CALCULATION PURPOSES ONLY AND ARE NOT VALID FOR BIDDING.
6. CONTRACTOR SHALL UPDATE ALL MODIFIED PANEL DIRECTORIES OR CREATE A NEW TYPED DIRECTORY, IF ONE DOES NOT EXIST, IDENTIFYING EACH CIRCUIT AND INSTALLED CIRCUIT LOADS, MOUNTED IN GLASS OR PLASTIC INSIDE DOOR. THE CONTRACTOR SHALL BE RESPONSIBLE FOR UPDATING DIRECTORIES TO INDICATE ALL NEW CIRCUITS AND ACTUAL AREA SERVED WHICH IS NOT NECESSARILY THE DESCRIPTION INDICATED ON THE BID DOCUMENTS. USE A COMPUTER OR TYPEWRITER TO CREATE DIRECTORY; HANDWRITTEN DIRECTORIES ARE NOT ACCEPTABLE.

CONSTRUCTION NOTES

1. PROVIDE NEW CIRCUIT BREAKER IN EXISTING DISTRIBUTION BOARD. TYPE AND AIC RATING TO MATCH EXISTING. UPDATE PANELBOARD DIRECTORY PER GENERAL NOTE REQUIREMENTS.
2. PROVIDE NEW CIRCUIT BREAKER IN EXISTING PANELBOARD. TYPE AND AIC RATING TO MATCH EXISTING. UPDATE PANELBOARD DIRECTORY PER GENERAL NOTE REQUIREMENTS.

IDENTIFICATION STAMP
DIV. OF THE STATE ARCHITECT
APP: 03-125539 INC:
REVIEWED FOR
SS ☑ FLS ☑ ACS ☐
DATE: 03/27/2026

WESTGROUP DESIGNS
19900 MacArthur Boulevard I Suite 1000
Irvine I California I 92612
949.250.0880 I FAX 949.250.0882
www.westgroupdesigns.com

REGISTERED PROFESSIONAL ENGINEER
BRADEN KENDALL KERNEY
No. 22839
SIGNED 02/09/2026
ELECTRICAL
STATE OF CALIFORNIA

412 E. Vanderbilt Way
San Bernardino, CA 92408
Phone: 909.890.3700
Fax: 909.890.3770
Email: cadd@designwesteng.com
DESIGN WEST ENGINEERING
MECHANICAL · ELECTRICAL · ENERGY CONSULTANTS

FILLMORE MIDDLE SCHOOL - BUILDING F - GYM - HVAC REPLACEMENT

FILLMORE UNIFIED SCHOOL DISTRICT

543 A St, Fillmore, CA 93015

ISSUED FOR:
DSA V2 SUBMITTAL 11/21/25

REVISIONS:

REGISTRATION/SIGNATURE:

SHEET TITLE:
SINGLE LINE DIAGRAM, PANEL SCHEDULES

SHEET NUMBER:
E0-0.2

WD PROJ. #	DRAWN BY:	CHECKED	DATE
25817	JH / MK	BK	09/10/25

© WESTGROUP DESIGNS, INC.

25-099

PRINTED: 2/9/2026 7:33:37 AM
PATH: Autodesk Docs://25-099 Fillmore Middle School Gym HVAC Replacement/25-099 Fillmore Middle School Gym HVAC Replacement_MEP_Central_R24.rvt

GENERAL NOTES

1. REFER TO ELECTRICAL LEGENDS AND NOTES SHEET FOR ADDITIONAL DEMOLITION NOTES.
2. CONTRACTOR IS TO USE EXTREME CAUTION WHEN STARTING THE DEMOLITION WORK. CONTRACTOR SHALL MAKE THEIR DUE DILIGENCE IN SOURCE TRACING ALL EXISTING EQUIPMENT, DISCONNECTS AND CIRCUITS ENTERING AND LEAVING THIS AREA. CONTRACTOR SHALL LABEL ALL CONDUITS WITH THEIR SOURCE LOCATION IF CONDUITS ARE TO REMAIN. ANY CIRCUITS BEING REMOVED SHALL HAVE ITS SOURCE CORRECTLY LABELED AS 'SPARE' AND SAFE-OFF CIRCUIT BREAKER. ANY CIRCUITS THAT REMAIN ARE TO BE REDLINED AND ADDED TO AS-BUILTS.

DEMOLITION NOTES

DEMOLITION PLAN - FIRST FLOOR | SCALE: 1/8" = 1'-0" | 1

IDENTIFICATION STAMP
DIV. OF THE STATE ARCHITECT
APP: 03-125539 INC:
REVIEWED FOR
SS ☑ FLS ☑ ACS ☐
DATE: 03/27/2026

WESTGROUP DESIGNS
19900 MacArthur Boulevard I Suite 1000
Irvine I California I 92612
949.250.0880 I FAX 949.250.0882
www.westgroupdesigns.com

REGISTERED PROFESSIONAL ENGINEER
BRADEN KEMPER
No. 22839
SIGNED 02/09/2026
ELECTRICAL
STATE OF CALIFORNIA

412 E. Vanderbilt Way
San Bernardino, CA 92408
Phone: 909.890.3700
Fax: 909.890.3770
Email: cadd@designwesteng.com
DESIGN WEST ENGINEERING
MECHANICAL • ELECTRICAL • ENERGY CONSULTANTS

FILLMORE MIDDLE SCHOOL - BUILDING F - GYM - HVAC REPLACEMENT

FILLMORE UNIFIED SCHOOL DISTRICT

543 A St, Fillmore, CA 93015

ISSUED FOR:
DSA V2 SUBMITTAL 11/21/25

REVISIONS:

REGISTRATION/SIGNATURE:

SHEET TITLE:
DEMOLITION PLAN - FIRST FLOOR

SHEET NUMBER:
E2-1.1

WD PROJ. #	DRAWN BY:	CHECKED	DATE
25817	JH / MK	BK	09/10/25

© WESTGROUP DESIGNS, INC.

25-099

PRINTED: 2/9/2026 7:33:38 AM
PATH: Autodesk Docs://25-099 Fillmore Middle School Gym HVAC Replacement/25-099 Fillmore Middle School Gym HVAC Replacement_MEP_Central_R24.rvt

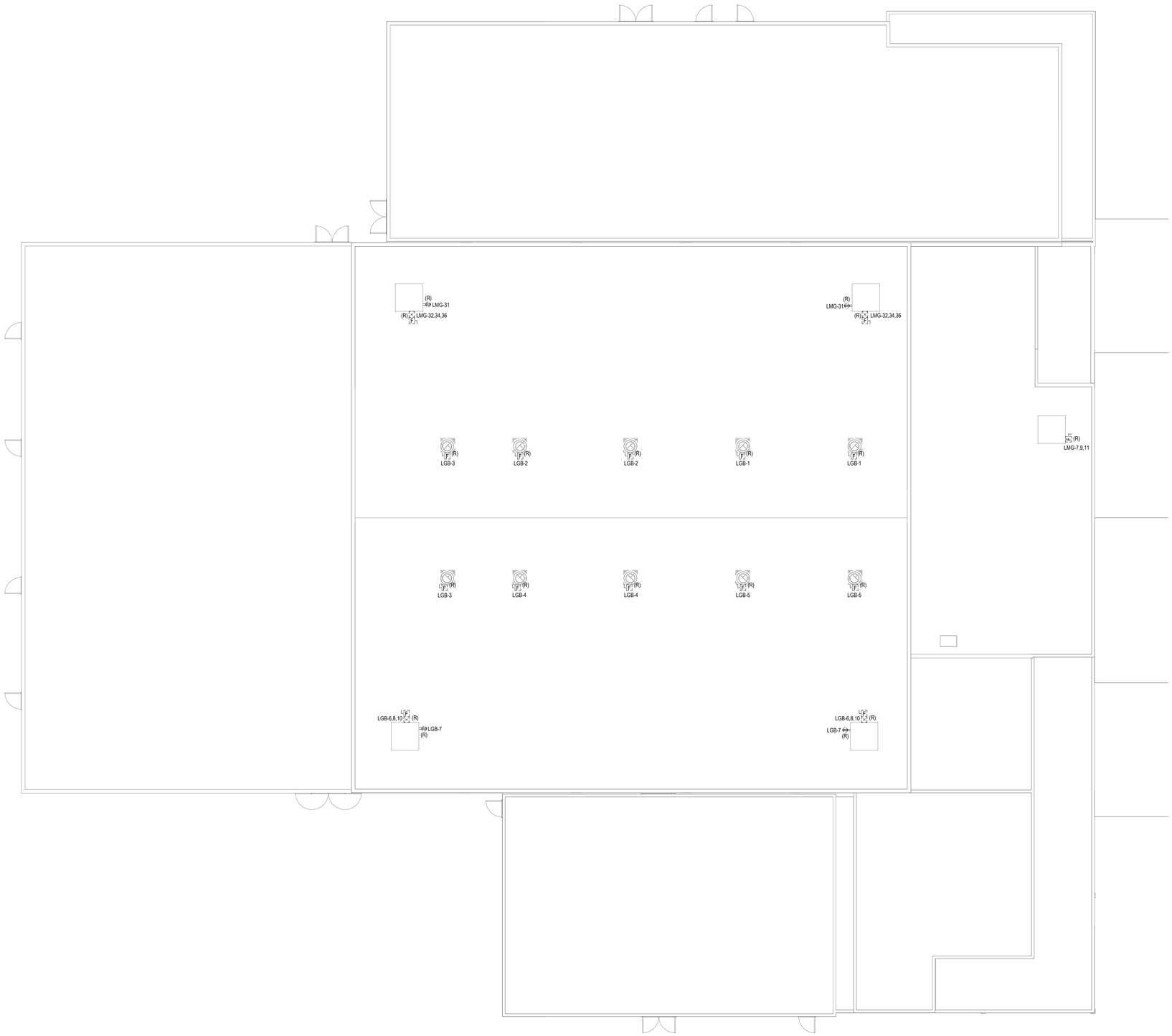

GENERAL NOTES

1. REFER TO ELECTRICAL LEGENDS AND NOTES SHEET FOR ADDITIONAL DEMOLITION NOTES.
2. CONTRACTOR IS TO USE EXTREME CAUTION WHEN STARTING THE DEMOLITION WORK. CONTRACTOR SHALL MAKE THEIR DUE DILIGENCE IN SOURCE TRACING ALL EXISTING EQUIPMENT, DISCONNECTS AND CIRCUITS ENTERING AND LEAVING THIS AREA. CONTRACTOR SHALL LABEL ALL CONDUITS WITH THEIR SOURCE LOCATION IF CONDUITS ARE TO REMAIN. ANY CIRCUITS BEING REMOVED SHALL HAVE ITS SOURCE CORRECTLY LABELED AS 'SPARE' AND SAFE-OFF CIRCUIT BREAKER. ANY CIRCUITS THAT REMAIN ARE TO BE REDLINED AND ADDED TO AS-BUILTS.

DEMOLITION NOTES

DEMOLITION PLAN - ROOF | SCALE: 1/8" = 1'-0" | 1

IDENTIFICATION STAMP
DIV. OF THE STATE ARCHITECT
APP: 03-125539 INC:
REVIEWED FOR
SS ☑ FLS ☑ ACS ☐
DATE: 03/27/2026

WESTGROUP DESIGNS
19900 MacArthur Boulevard I Suite 1000
Irvine I California I 92612
949.250.0880 I FAX 949.250.0882
www.westgroupdesigns.com

REGISTERED PROFESSIONAL ENGINEER
BRYAN KEMPER KERR
No. 22839
SIGNED 02/09/2026
ELECTRICAL
STATE OF CALIFORNIA

412 E. Vanderbilt Way
San Bernardino, CA 92408
Phone: 909.890.3700
Fax: 909.890.3770
Email: cadd@designwesteng.com
DESIGN WEST ENGINEERING
MECHANICAL • ELECTRICAL • ENERGY CONSULTANTS

FILLMORE MIDDLE SCHOOL - BUILDING F - GYM - HVAC REPLACEMENT

FILLMORE UNIFIED SCHOOL DISTRICT

543 A St, Fillmore, CA 93015

ISSUED FOR:
DSA V2 SUBMITTAL 11/21/25

REVISIONS:

REGISTRATION/SIGNATURE:

SHEET TITLE:
DEMOLITION PLAN - ROOF

SHEET NUMBER:
E2-1.2

WD PROJ. #	DRAWN BY:	CHECKED	DATE
25817	JH / MK	BK	09/10/25

© WESTGROUP DESIGNS, INC.

25-099

PRINTED: 2/9/2026 7:33:39 AM
PATH: Autodesk Docs://25-099 Fillmore Middle School Gym HVAC Replacement/25-099 Fillmore Middle School Gym HVAC Replacement_MEP_Central_R24.rvt

GENERAL NOTES

1. COORDINATE POWER AND DATA DEVICE LOCATIONS, AND DEVICE PLATE COLOR WITH ARCHITECT.
2. NO PIPING, DUCTS OR EQUIPMENT FOREIGN TO ELECTRICAL EQUIPMENT SHALL BE PERMITTED TO BE LOCATED WITHIN A SPACE EXTENDING FROM FLOOR TO A HEIGHT OF 6' ABOVE THE EQUIPMENT. CEC 110.26(E)1.
3. ALL EXTERIOR ELECTRICAL EQUIPMENT SHALL BE NEMA 3R.
4. ALL CONDUITS SHALL BE INSTALLED IN THE CEILING BELOW U.O.N.
5. REFER TO MECHANICAL AND PLUMBING PLANS FOR THE EXACT LOCATION OF HVAC EQUIPMENT AND ADDITIONAL WIRING REQUIREMENTS.
6. PROVIDE DUCT DETECTORS/S.F.D. POWER AND CONNECTIONS AS INDICATED ON MECHANICAL DRAWINGS.
7. PROVIDE FLEXIBLE SEAL TYPE CONDUIT FOR CONNECTION TO ALL HVAC EQUIPMENT.
8. MOUNT ALL DISCONNECT SWITCHES INDEPENDENT OF THE HVAC UNIT
9. ALL EXTERIOR RECEPTACLE OUTLETS SHALL BE GFCI TYPE.
10. PROVIDE HEAVY DUTY DISCONNECT SWITCHES WITH DUAL ELEMENT FUSES TO MATCH MOTOR H.P. RATING.

CONSTRUCTION NOTES

1. PROVIDE WEATHER PROOF GFCI WORK OUTLET AS REQUIRED WITHIN 25'-0" OF MECHANICAL EQUIPMENT.
2. STUB CONDUIT UP AT WALL. PROVIDE PULLBOX AT TOP OF EXTERIOR WALL WITH WEATHERPROOF SEAL AND ROUTE CONDUIT INTO CEILING SPACE.

IDENTIFICATION STAMP
DIV. OF THE STATE ARCHITECT
APP: 03-125539 INC:
REVIEWED FOR
SS ☑ FLS ☑ ACS ☐
DATE: 03/27/2026

WESTGROUP DESIGNS
19900 MacArthur Boulevard I Suite 1000
Irvine I California I 92612
949.250.0880 I FAX 949.250.0882
www.westgroupdesigns.com

REGISTERED PROFESSIONAL ENGINEER
BRYAN KEITH KENDALL
No. 22839
SIGNED 02/09/2026
ELECTRICAL
STATE OF CALIFORNIA

412 E. Vanderbilt Way
San Bernardino, CA 92408
Phone: 909.890.3700
Fax: 909.890.3770
Email: cadd@designwesteng.com
DESIGN WEST ENGINEERING
MECHANICAL - ELECTRICAL - ENERGY CONSULTANTS

FILLMORE MIDDLE SCHOOL - BUILDING F - GYM - HVAC REPLACEMENT

FILLMORE UNIFIED SCHOOL DISTRICT

543 A St, Fillmore, CA 93015

ISSUED FOR:
DSA V2 SUBMITTAL 11/21/25

REVISIONS:

REGISTRATION/SIGNATURE:

SHEET TITLE:
POWER PLAN - FIRST FLOOR

SHEET NUMBER:
E3-1.1

WD PROJ. #	DRAWN BY:	CHECKED	DATE
25817	JH / MK	BK	09/10/25

© WESTGROUP DESIGNS, INC.

25-099

POWER PLAN - FIRST FLOOR | SCALE: 1/8" = 1'-0" | 1

PRINTED: 2/9/2026 7:33:39 AM
PATH: Autodesk Docs://25-099 Fillmore Middle School Gym HVAC Replacement/25-099 Fillmore Middle School Gym HVAC Replacement_MEP_Central_R24.rvt

GENERAL NOTES

1. COORDINATE POWER AND DATA DEVICE LOCATIONS, AND DEVICE PLATE COLOR WITH ARCHITECT.
2. NO PIPING, DUCTS OR EQUIPMENT FOREIGN TO ELECTRICAL EQUIPMENT SHALL BE PERMITTED TO BE LOCATED WITHIN A SPACE EXTENDING FROM FLOOR TO A HEIGHT OF 6' ABOVE THE EQUIPMENT. CEC 110.26(E)1.
3. ALL EXTERIOR ELECTRICAL EQUIPMENT SHALL BE NEMA 3R.
4. ALL CONDUITS SHALL BE INSTALLED IN THE CEILING BELOW U.O.N.
5. REFER TO MECHANICAL AND PLUMBING PLANS FOR THE EXACT LOCATION OF HVAC EQUIPMENT AND ADDITIONAL WIRING REQUIREMENTS.
6. PROVIDE DUCT DETECTORS/S.F.D. POWER AND CONNECTIONS AS INDICATED ON MECHANICAL DRAWINGS.
7. PROVIDE FLEXIBLE SEAL TYPE CONDUIT FOR CONNECTION TO ALL HVAC EQUIPMENT.
8. MOUNT ALL DISCONNECT SWITCHES INDEPENDENT OF THE HVAC UNIT
9. ALL EXTERIOR RECEPTACLE OUTLETS SHALL BE GFCI TYPE.
10. PROVIDE HEAVY DUTY DISCONNECT SWITCHES WITH DUAL ELEMENT FUSES TO MATCH MOTOR H.P. RATING.

CONSTRUCTION NOTES

(1) PROVIDE WEATHER PROOF GFCI WORK OUTLET AS REQUIRED WITHIN 25'-0" OF MECHANICAL EQUIPMENT.

IDENTIFICATION STAMP
DIV. OF THE STATE ARCHITECT
APP: 03-125539 INC:
REVIEWED FOR
SS ☑ FLS ☑ ACS ☐
DATE: 03/27/2026

WESTGROUP DESIGNS
19900 MacArthur Boulevard I Suite 1000
Irvine I California I 92612
949.250.0880 I FAX 949.250.0882
www.westgroupdesigns.com

REGISTERED PROFESSIONAL ENGINEER
BRYAN KEMPER
No. 22839
SIGNED 02/09/2026
ELECTRICAL
STATE OF CALIFORNIA

412 E. Vanderbilt Way
San Bernardino, CA 92408
Phone: 909.890.3700
Fax: 909.890.3770
Email: cadd@designwesteng.com
DESIGN WEST ENGINEERING
MECHANICAL - ELECTRICAL - ENERGY CONSULTANTS

FILLMORE MIDDLE SCHOOL - BUILDING F - GYM - HVAC REPLACEMENT

FILLMORE UNIFIED SCHOOL DISTRICT

543 A St, Fillmore, CA 93015

ISSUED FOR:
DSA V2 SUBMITTAL 11/21/25

REVISIONS:

REGISTRATION/SIGNATURE:

SHEET TITLE:
POWER PLAN - ROOF

SHEET NUMBER:
E3-1.2

WD PROJ. #	DRAWN BY:	CHECKED	DATE
25817	JH / MK	BK	09/10/25

© WESTGROUP DESIGNS, INC.

25-099

POWER PLAN - ROOF SCALE: 1/8" = 1'-0" 1

PRINTED: 2/9/2026 7:33:40 AM
PATH: Autodesk Docs://25-099 Fillmore Middle School Gym HVAC Replacement/25-099 Fillmore Middle School Gym HVAC Replacement_MEP_Central_R24.rvt

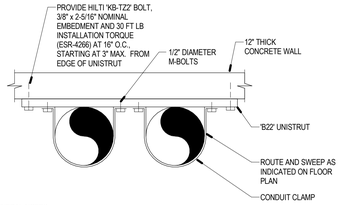

GENERAL NOTES:

1. PROVIDE THIS SUPPORT ASSEMBLY AT 10'-0" O.C.MAX.AND WITHIN 3'-0" OF CONDUIT TERMINATIONS, DIRECTION CHANGES AND FLEXIBLE COUPLINGS.

CONDUIT SUPPORT | 1

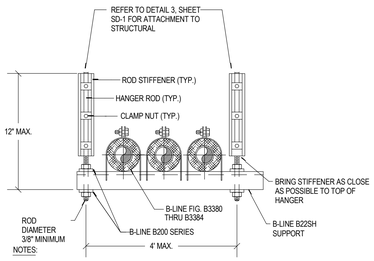

NOTES:

1. MAXIMUM CONDUIT SIZE SHALL NOT EXCEED 2" TRADE SIZE.
2. 100 LBS. MAX LOAD ON TRAPEZE.
3. (3) MAX. CONDUIT COUNT, AT 1" MAX. DIAMETER.
4. FOR ROD STIFFENER AND HANGER ROD DETAILS SEE 3/SD-1.
5. SPACING TO BE MAX 6'-0".

CONDUIT TRAPEZE | 3

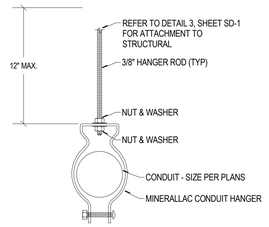

NOTES:

1. PROVIDE THIS SUPPORT ASSEMBLY AT 10'-0" O.C.MAX AND WITHIN 3'-0" OF CONDUIT TERMINATIONS, DIRECTION CHANGES AND FLEXIBLE COUPLINGS.
2. MAXIMUM CONDUIT SIZE SHALL NOT EXCEED 2" TRADE SIZE.

CONDUIT HANGER | 2

IDENTIFICATION STAMP
DIV. OF THE STATE ARCHITECT
APP: 03-125539 INC:
REVIEWED FOR
SS ☑ FLS ☑ ACS ☐
DATE: 03/27/2026

WESTGROUP DESIGNS
19900 MacArthur Boulevard I Suite 1000
Irvine I California I 92612
949.250.0880 I FAX 949.250.0882
www.westgroupdesigns.com

REGISTERED PROFESSIONAL ENGINEER
ROBERT KEMPER
No. 22839
SIGNED 02/09/2026
ELECTRICAL
STATE OF CALIFORNIA

412 E. Vanderbilt Way
San Bernardino, CA 92408
Phone: 909.890.3700
Fax: 909.890.3770
Email: cadd@designwesteng.com
DESIGN WEST ENGINEERING
MECHANICAL • ELECTRICAL • ENERGY CONSULTANTS

FILLMORE MIDDLE SCHOOL - BUILDING F - GYM - HVAC REPLACEMENT

FILLMORE UNIFIED SCHOOL DISTRICT
543 A St, Fillmore, CA 93015

ISSUED FOR:
DSA V2 SUBMITTAL 11/21/25

REVISIONS:

REGISTRATION/SIGNATURE:

SHEET TITLE:
ELECTRICAL DETAILS

SHEET NUMBER:
E4-1.1

WD PROJ. #	DRAWN BY:	CHECKED	DATE
25817	Author	Designer	09/10/25

© WESTGROUP DESIGNS, INC.

25-099

PRINTED: 2/9/2026 7:33:40 AM
PATH: Autodesk Docs://25-099 Fillmore Middle School Gym HVAC Replacement/25-099 Fillmore Middle School Gym HVAC Replacement_MEP_Central_R24.rvt

GENERAL NOTES

1. ALL MATERIALS AND WORKMANSHIP SHALL CONFORM TO THE LATEST CALIFORNIA CODE OF REGULATIONS (CCR), CALIFORNIA ELECTRICAL CODE EDITION AND ALL APPLICABLE LOCAL CODES AND REGULATIONS.
2. ALL PANELS, AND CABINETS, ETC. SHALL HAVE SUFFICIENT GUTTER SPACE AND LUGS IN COMPLIANCE TO UL REQUIREMENTS TO ACCOMMODATE CONDUCTORS SHOWN.
3. WHERE WIRE SIZES ARE INDICATED ON PLANS, FOR INDIVIDUAL CIRCUITS, THE WIRE SIZE INDICATED SHALL APPLY TO THE COMPLETE CIRCUIT, UNLESS OTHERWISE NOTED.
4. CONTRACTOR SHALL EXTEND WIRING FROM ALL JUNCTION BOXES, DEVICES, ETC. AND MAKE FINAL CONNECTION AS REQUIRED TO ALL BUILDING EQUIPMENT REQUIRING ELECTRICAL CONNECTIONS.
5. ALL MOUNTING HEIGHTS SHOWN ARE TO CENTERLINE OF OUTLET OR DEVICE UNLESS INDICATED OTHERWISE. LOCATION OF WALL DEVICES ARE SUBJECT TO MODIFICATIONS.
6. DRAWINGS ARE DIAGRAMMATIC AND INDICATE GENERAL ARRANGEMENT OF SYSTEMS AND WORK INCLUDED. FOLLOW DRAWINGS IN LAYING OUT WORK AND CHECK DRAWINGS OR OTHER TRADES RELATING TO WORK. TO VERIFY SPACE IN WHICH WORK WILL BE INSTALLED. MAINTAIN HEADROOM AND MINIMUM CODE REQUIRED WORKING CLEARANCES AT ALL TIMES.
7. CONTRACTOR SHALL COORDINATE THE LOCATION OF ALL WALL AND CEILING OUTLET BOXES FOR DETECTORS, HORNS/STROBES, FIRE ALARM PULL STATIONS AND OTHER DEVICES WITH EXISTING AND/OR NEW CABINETS, FURNITURE, EQUIPMENT ETC., TO AVOID CONFLICT.
8. FURNISH APPROVED EXPANSION FITTINGS WHERE RACEWAY CROSSES BUILDING EXPANSION JOINTS.
9. FURNISH FISH WIRE IN EACH RACEWAY RUN OVER 10' IN LENGTH, IN WHICH PERMANENT WIRING IS NOT INSTALLED.
10. PROVIDE PULL BOXES WHEREVER NECESSARY TO FACILITATE PULLING OF CONDUCTORS. COORDINATE LOCATIONS OF BOXES WITH OTHER TRADES TO AVOID CONFLICT. PULL BOXES SHALL BE ACCESSIBLE. THE SIZE OF PULL BOX SHALL COMPLY WITH N.E.C. REQUIREMENTS.
11. ALL EXTERIOR ELECTRICAL DEVICES AND EQUIPMENT INCLUDING THOSE THAT ARE EXPOSED TO OUTSIDE ENVIRONMENT (UP TO 16') SHALL BE WEATHERPROOF TYPE, NEMA 3R.
12. NO CONDUIT RUNS SHALL BE ALLOWED IN CONCRETE SLABS. ALL CONDUITS WILL BE PLACED ABOVE ACCESSIBLE CEILING SPACES UNLESS SPECIFICALLY INDICATED TO BE UNDERGROUND.
13. ALL WIRING IN FIRE RATED WALL IS TO BE INSTALLED IN A METALLIC CONDUIT SYSTEM.
14. ALL ELECTRIC MATERIAL SHALL BE LISTED BY "UL" FOR THE TYPE OF APPLICATION AND "UL" LABEL SHALL APPEAR ON ALL ELECTRICAL EQUIPMENT.
15. CONDUCTORS SHALL HAVE UNDERWRITER'S LABORATORIES, INC.(UL) LISTED, 600 VOLT INSULATION OF TYPE SPECIFIED BELOW OR ELSEWHERE IN THE SPECIFICATIONS. CONDUCTORS SHALL BE COPPER AND LISTED FOR 90 DEGREE APPLICATIONS.
16. BRANCH CIRCUITS - LIGHTING AND POWER.
    a. #10 AWG AND SMALLER, SOLID WIRE TYPE THW OR THHN/THWN-2, THHW (THHN FOR DRY LOCATION ONLY).
    b. #8 AWG TO #2 AWG, STRANDED TYPE THW OR THHN/THWN .
    c. #1 AWG AND LARGER, STRANDED TYPE XHHW-2.
17. PROVIDE GREEN INSULATED GROUNDING CONDUCTOR IN EACH RACEWAY INCLUDING CONDUITS, PLUG STRIPS, WIREMOLD. SIZE OF GROUNDING SHALL BE IN ACCORDANCE WITH CALIFORNIA ELECTRICAL CODE ARTICLE 250.
18. WIRING METHOD SHALL BE EMT ABOVE GROUND AND MOUNTED IN CONCEALED SPACES (UNLESS APPROVED OTHERWISE) AND SCHEDULE-40 PVC FOR UNDERGROUND INSTALLATION UNLESS NOTED OTHERWISE.
19. UNLESS SPECIFICALLY SHOWN ON THESE PLANS, NO STRUCTURAL MEMBERS SHALL BE CUT, DRILLED NOR NOTCHED WITHOUT PRIOR WRITTEN AUTHORIZATION FROM THE STRUCTURAL ENGINEER AND THE DISTRICT STRUCTURAL ENGINEER FROM THE DIVISION OF THE STATE ARCHITECT.

NOTE TO CONTRACTOR

DO NOT SCALE DRAWINGS

CONTRACTOR SHALL VERIFY PLANS AND EXISTING DIMENSIONS AND CONDITIONS ON THE JOB SITE AND SHALL IMMEDIATELY NOTIFY THE ARCHITECT IN WRITING OF ANY DISCREPANCIES BEFORE PROCEEDING WITH THE WORK OR BE RESPONSIBLE FOR THE SAME.

APPLICABLE CODES

LIST OF APPLICABLE CODES

2025 CALIFORNIA ADMINISTRATIVE CODE (CAC), PART 1, TITLE 24 CCR

2022 CALIFORNIA BUILDING CODE (CBC), PART 2, TITLE 24 CCR

2022 CALIFORNIA ELECTRICAL CODE (CEC), PART 3, TITLE 24 CCR

2022 CALIFORNIA MECHANICAL CODE (CMC), PART 4, TITLE 24 CCR

2022 CALIFORNIA PLUMBING CODE (CPC), PART 5, TITLE 24 CCR

2022 CALIFORNIA ENERGY CODE, PART 6, TITLE 24 CCR

2022 CALIFORNIA FIRE CODE (CFC), PART 9, TITLE 24 CCR

2022 CALIFORNIA EXISTING BUILDING CODE (CEBC), PART 10, TITLE 24 CCR

2022 CALIFORNIA GREEN BUILDING STANDARDS CODE (CALGREEN), PART 11, TITLE 24 CCR

2022 CALIFORNIA REFERENCED STANDARDS CODE, PART 12, TITLE 24 CCR

TITLE 19 CCR, PUBLIC SAFETY, STATE FIRE MARSHAL REGULATIONS

PARTIAL LIST OF APPLICABLE STANDARDS

NFPA 72 NATIONAL FIRE ALARM AND SIGNALING CODE (CA AMENDED); 2022 EDITION

UL 464 AUDIBLE SIGNALING DEVICES FOR FIRE ALARM AND SIGNALING SYSTEMS, INCLUDING ACCESSORIES 2003 EDITION

UL 521 STANDARD FOR HEAT DETECTORS FOR FIRE PROTECTIVE SIGNALING SYSTEMS 1999 EDITION

UL 1971 STANDARD FOR SIGNALING DEVICES FOR THE HEARING IMPAIRED 2002 EDITION

FOR A COMPLETE LIST OF APPLICABLE NFPA STANDARDS REFER TO 2022 CBC (SFM) CHAPTER 35 AND CALIFORNIA FIRE CODE CHAPTER 80.

SEE CALIFORNIA BUILDING CODE, CHAPTER 35, FOR STATE OF CALIFORNIA AMENDMENTS TO THE NFPA STANDARDS.

DEMOLITION GENERAL NOTES

1. THE DEMOLITION NOTE REFERENCE PERTAIN TO ALL RELATED SHEETS WHERE EXISTING ELECTRICAL WORK IS INDICATED.
2. THE CONTRACTOR SHALL VISIT THE PROJECT SITE AND MAKE THEMSELVES COMPLETELY FAMILIAR WITH THE EXISTING INSTALLED CONDITIONS.
3. ALL EQUIPMENT OR WORK REQUIRED TO CARRY OUT THE DEMOLITION SCOPE OF WORK IS CONSIDERED TO BE PART OF THE CONTRACTOR SCOPE OF WORK. NO EXTRAS WILL BE CONSIDERED TO PERFORM THE REQUIRED WORK.
4. THE CONTRACTOR SHALL OBTAIN WRITTEN PERMISSION FROM THE FACILITY DIRECTOR PRIOR TO THE SCHEDULING OF ANY POWER OUTAGE. SUCH PERMISSION MUST BE OBTAINED IN WRITING AND BE GRANTED AT LEAST 7 DAYS PRIOR TO ANY SCHEDULE SHUT DOWN. THE SHUT DOWN SHALL NOT EXCEED A DURATION OF 4 HOURS.
5. THE CONTRACTOR SHALL NOT STORE ON SITE ANY ITEMS THAT WERE DEMOLISHED FOR ANY EXTENDED PERIOD OF TIME, WITHOUT THE WRITTEN PERMISSION OF THE FACILITY DIRECTOR.
6. ALL ELECTRICAL ITEMS DESIGNATED AS EXISTING TO REMAIN SHALL AS PART OF THIS SCOPE OF WORK BE CLEANED AND TESTED, TO INSURE PROPER OPERATION. ANY ITEMS THAT FAIL TO PASS THE TEST SHALL BE BROUGHT TO THE ATTENTION OF THE FIELD INSPECTOR AND THE ENGINEER OF RECORD FOR RESOLUTION.
7. THE CONTRACTOR SHALL REMOVE ALL EXISTING FIRE ALARM EQUIPMENT, DEVICES, CONDUITS, WIRES AND OTHER ELECTRICAL APPARATUS DESIGNATED AS EXISTING TO BE REMOVED. DEMOLITION ITEMS, IF NOT REQUIRED TO BE SALVAGED BY OWNER, BECOME THE PROPERTY OF THE CONTRACTOR AND SHALL BE DISPOSED OF IN AN APPROPRIATE MANNER.
8. THE CONTRACTOR SHALL REMOVE ALL CONDUITS SERVING DEVICES WHICH ARE DESIGNATED AS EXISTING TO BE REMOVED, BACK TO THE SOURCE WHEN POSSIBLE. IF THE NATURE OF THE EXISTING INSTALLATION WILL NOT ALLOW REMOVAL THE CONTRACTOR SHALL REMOVE ALL EXPOSED CONDUIT AND ABANDON THE REMAINDER AFTER REMOVING ALL CONDUCTORS.
9. WHERE FIRE ALARM DEVICES ARE TO BE REMOVED, REMOVE ALL CONDUIT AND WIRING BACK TO SOURCE, TERMINAL CABINETS AND CONTROL PANELS, PROVIDE BLANK COVER PLATE FOR ABANDONED JUNCTION BOXES.
10. REMOVE ALL CONTROL PANELS, PULL-BOXES, TERMINAL CABINETS, ETC. FOR SYSTEMS TO BE DEMOLISHED EXCEPT WHERE ANY OF THE EXISTING DEVICES, SYSTEMS, CONSOLES, ETC. ARE TO BE REUSED FOR UPGRADE.
11. PROVIDE BLANK COVER PLATE FOR ALL EMPTY OUTLET BOXES WHERE DEVICES AND/OR WIRING HAVE BEEN REMOVED AS PART OF THIS CONTRACT.
12. AFTER REMOVAL OF WIREMOLD AND ASSOCIATED FITTINGS, PATCH, REPAIR AND PAINT AFFECTED SURFACES TO MATCH EXISTING.
13. EXISTING CONDUIT CAN BE REUSED PROVIDING IT IS CHECKED FOR CONTINUITY OF GROUND, BLOWN FREE OF DEBRIS, AND DOES NOT INTERFERE WITH NEW CONSTRUCTION.
14. REMOVALS AND REPAIRS TO EXISTING ELECTRICAL WORK REQUIRED TO AVOID CONFLICTS WITH NEW CONSTRUCTION TO MEET MINIMUM CODE REQUIREMENTS.
15. A FIELD SURVEY VERIFICATION IS MANDATORY IN ORDER TO SUBMIT AN ELECTRICAL BID, FAILURE TO DO SO SHALL NOT RELIEVE THIS CONTRACTOR FROM PERFORMING THE WORK OF THIS CONTRACT.

LEGEND AND SYMBOLS

SYMBOL	DESCRIPTION
J	ABOVE CEILING, CONCEALED, JUNCTION BOX, WITH COVER, PER CALIFORNIA ELECTRICAL CODE (CEC) TABLE 370-b(a), 4" SQUARE DEEP, WITH PLASTER RING
J	RECESSED WALL MOUNTED, JUNCTION BOX, WITH COVER, PER CALIFORNIA ELECTRICAL CODE (CEC) TABLE 370-b(a), 4" SQUARE DEEP, WITH PLASTER RING
	BRANCH PANELBOARD, WALL MOUNTED, SEE PLANS AND SCHEDULE. (RECESSED MOUNTED)
	BRANCH PANELBOARD, WALL MOUNTED, SEE PLANS AND SCHEDULE. (SURFACE MOUNTED)
	CONDUIT TURN DOWN
	CONDUIT TURN UP
	CONDUIT STUBBED AND CAPPED
	RACEWAY CONCEALED IN WALLS OR ABOVE CEILING
	CONDUIT CONCEALED IN OR UNDER FLOOR, COORDINATE WITH G.C.: OR, BURIAL CONDUIT UNDERGROUND IN SCHEDULE - 40 PVC UNLESS NOTED OTHERWISE. VERIFY DEPTH AND TRENCHING WITH G.C.
(E)	EXISTING CONDUIT AND WIRING TO REMAIN
(R)	PULL-OUT WIRES AND ABANDON CONDUIT. CUT AND CAPPED FLUSH WITH WALL OR SLAB.
E	EXISTING CONDUIT TO REMAIN
R	EXISTING CONDUIT AND WIRE TO BE REMOVED
(E)	EXISTING DEVICE TO REMAIN
(R)	REMOVE EXISTING DEVICE AND ASSOCIATED CONDUIT AND WIRE
(RL)	REMOVE EXISTING DEVICE AND RELOCATE AS SHOWN ON PLAN
(NL)	NEW LOCATION OF RELOCATED DEVICE
A-1,3	HOMERUN TO CIRCUITS #1 AND #3 IN PANEL "A". REFER TO PANEL SCHEDULE FOR CONDUIT AND CONDUCTOR SIZES. QUANTITY AS REQUIRED.
PB	CONCRETE ELECTRICAL PULLBOX WITH LID APPROPRIATE FOR INSTALLATION LOCATION. LID SHALL BE LABELED ACCORDING TO USE.

ABBREVIATIONS

A	AMPERE	MH	MANHOLE
AF	AMPERE FRAME RATING	MAX	MAXIMUM
AFF	ABOVE FINISHED FLOOR	NC	NORMALLY CLOSED
AIC	AMPERE INTERRUPTING CAPACITY	NEC	NATIONAL ELECTRICAL CODE
AFG	ABOVE FINISHED GRADE	NEMA	NATIONAL ELECTRICAL MANUFACTURER'S ASSOCIATION
ASSY	ASSEMBLY		
AT	AMPERE TRIP RATING	NEW (N)	NEW, TO BE FURNISHED AND INSTALLED BY CONTRACTOR
AWG	AMERICAN WIRE GAUGE		
BKBD	BACKBOARD	NF	NON FUSED
BLDG	BUILDING	NIC	NOT IN CONTRACT
BKR	BREAKER	NO	NUMBER, NORMALLY OPEN
C	CONDUIT	NTS	NOT TO SCALE
CAB	CABINET	OC	ON CENTER
CB	CIRCUIT BREAKER	OD	OUTSIDE DIAMETER
CKT	CIRCUIT	P	POLE
CFSD, FSD	COMBINATION FIRE SMOKE DAMPER	PB	PULL BOX
CO	CONDUIT ONLY	PF	POWER FACTOR
CT	CURRENT TRANSFORMER	PNL	PANEL
CU	COPPER	POC	POINT OF CONNECTION
℄	CENTERLINE	PWR	POWER
DISC	DISCONNECT	PVC	POLYVINYL CHLORIDE
DN	DOWN	QTY	QUANTITY
DWG	DRAWING	REQD	REQUIRED
EA	EACH	REQMT	REQUIREMENT
EC	ELECTRICAL CONTRACTOR	RGS	RIGID GALVANIZED STEEL
EQUIP	EQUIPMENT	RM	ROOM
EMERG	EMERGENCY	SHT	SHEET
EOL	END OF LINE RESISTOR	SPEC	SPECIFICATIONS
EXIST, (E)	EXISTING	SW	SWITCH
F	FUSE	SWBD	SWITCHBOARD
FA	FIRE ALARM	TEL	TELEPHONE
FACP	FIRE ALARM CONTROL PANEL	TERM	TERMINAL
FF	FINISHED FLOOR	TYP	TYPICAL
FG	FINISHED GRADE	UL	UNDERWRITERS LABORATORY
FLA	FULL LOAD CURRENT	UPS	UNINTERRUPTIBLE POWER SUPPLY
FPB	FIRE ALARM PULL BOX	UON	UNLESS OTHERWISE NOTED
GEN	GENERATOR	V	VOLT, VOLTAGE
GFI	GROUND FAULT INTERRUPTER	VA	VOLT-AMPERE
GND	GROUND	W	WATT
HP	HORSE POWER	WP	WEATHERPROOF
HT	HEIGHT	WW	WIREWAY
HV	HIGH VOLTAGE	XFMR	TRANSFORMER
J-BOX	JUNCTION BOX	4W	FOUR-WIRE
KCMIL	THOUSAND CIRCULAR MILS	3W	THREE-WIRE
KW	KILOWATT		JUNCTION BOX
KV	KILO VOLT	4S	(4" SQUARED X2 1/8" DEEP)
KVA	KILO VOLT-AMPERE	Ø	DIAMETER, PHASE
LDC	LOCAL DISTRIBUTION CABINET	#	NUMBER
LDF	LOCAL DISTRIBUTION FRAME	°C	DEGREE CELSIUS
LCL	LONG CONTINUOUS LOAD		
LTG	LIGHTING		
LV	LOW VOLTAGE	(E)	EXISTING TO REMAIN
MFR	MANUFACTURER	(R)	REMOVE EXISTING DEVICE AND ASSOCIATED CONDUIT AND WIRE
MAX	MAXIMUM		
MCC	MOTOR CONTROL CENTER	(RL)	REMOVE EXISTING DEVICE AND RELOCATE AS SHOWN ON PLAN
MIN	MINIMUM		
MH	MOUNTING HEIGHT	(NL)	NEW LOCATION OF RELOCATED DEVICE OR EQUIPMENT

FIRE ALARM SHEET INDEX

SHEET NUMBER	SHEET NAME
FA0-0.1	FIRE ALARM LEGENDS & NOTES
FA0-0.2	FIRE ALARM RISER DIAGRAM & BATTERY CALCS
FA1-1.1	FIRE ALARM SITE PLAN
FA2-2.1	FIRE ALARM DEMO PLAN - FIRST FLOOR
FA2-3.1	FIRE ALARM PLAN - FIRST FLOOR
FA3-1.1	FIRE ALARM DETAILS
SHEET COUNT: 6	

FIRE ALARM NOTES

1. A FIRE ALARM SYSTEM IS BEING EXPANDED IN OCCUPANCIES LISTED. PROVIDE ALL NECESSARY COMPONENTS TO THE EXISTING FIRE ALARM SYSTEM INCLUDING ALL MODULES, SLC LOOP CARDS, ETC. FOR A COMPLETE AND OPERABLE SYSTEM.
2. THE FIRE ALARM SYSTEM AND EQUIPMENT INDICATED ON THESE DRAWINGS SHALL BE APPROVED BY THE LOCAL FIRE AUTHORITY AND SHALL BE INSTALLED AS DESCRIBED ON THESE DRAWINGS AND AS NOTED IN THE SPECIFICATIONS. ANY CHANGES TO THESE PLANS, IE., DELETION, RELOCATION, ADDING OF DEVICES OR EQUIPMENT SUBSTITUTIONS SHALL BE RESUBMITTED TO THE LOCAL FIRE AUTHORITY FOR APPROVAL AT NO ADDITIONAL COST TO THE OWNER.
3. ALL WIRING AND INITIATING DEVICES SHALL BE SUPERVISED TO THE PRINCIPAL POINT OF ANNUNCIATION (FIRE ALARM CONTROL PANEL TO SUPERVISE ALL CIRCUITS AND INITIATING DEVICES).
4. WIRING SHALL NOT BE LOOPED THROUGH DEVICES; WIRE MUST BE CUT FOR IN AND FOR OUT.
5. ALL EXPOSED WIRING IN BUILDING OR BELOW CEILINGS SHALL BE IN CONDUITS. EXPOSED CONDUITS SHALL BE PAINTED TO MATCH SURFACE.
6. ALL TERMINATIONS IN JUNCTION BOXES, PULL BOXES AND TERMINAL CABINETS SHALL BE ON BOX MOUNTED TERMINAL BLOCKS. DO NOT USE WIRE NUTS FOR SPLICING. DO NOT SPLICE WIRES IN ANY BOXES.
7. ALL CONDUIT SIZES INDICATED IN DRAWINGS ARE MINIMUM. CONTRACTOR TO ADJUST SIZE FOR FIELD CONDITIONS BUT SHALL NOT BE SMALLER THAN 3/4 INCH.
8. ALL FIRE ALARM WIRING MUST TEST FREE OF OPENS, SHORTS AND GROUNDS.
9. FIRE ALARM DRAWINGS ARE SCHEMATIC IN NATURE ONLY. CONTRACTOR TO ROUTE CONDUIT AS FIELD CONDITIONS INDICATE.
10. CONDUIT AND JUNCTION/BACK BOXES ARE NOT TO BE USED FOR UNRELATED WIRING.
11. THE SYSTEM SHALL CONFORM TO TITLES 19 AND 24 AS APPLICABLE TO THIS PROJECT.
12. UPON COMPLETION OF SYSTEM INSTALLATION, THE SYSTEM SHALL BE TESTED IN THE PRESENCE OF, AND IN A MANNER ACCEPTABLE, TO THE ENFORCING AGENCY.
13. CONDUCTOR LENGTHS AND DEVICE QUANTITIES ARE SHOWN SOLELY FOR CALCULATION PURPOSES ONLY, AND SHALL NOT BE USED FOR BID TAKE-OFF.
14. THE FIRE ALARM SYSTEM SHALL CONFORM TO ARTICLE 760 OF CALIFORNIA ELECTRICAL CODE. INSTALLATION OF THE FIRE ALARM SYSTEM SHALL NOT BE STARTED UNTIL DETAILED PLANS AND SPECIFICATIONS, INCLUDING CALIFORNIA STATE FIRE MARSHAL LISTING NUMBERS FOR EACH COMPONENT OF THE SYSTEM HAVE BEEN APPROVED BY ENGINEER OF RECORD (E.O.R.) UPON COMPLETION OF THE INSTALLATION OF THE FIRE ALARM SYSTEM A SATISFACTORY TEST OF THE ENTIRE SYSTEM SHALL BE MADE IN THE PRESENCE THE FIRE AUTHORITY HAVING JURISDICTION.
15. PENETRATIONS OF PIPES, CONDUITS, ETC., IN WALLS REQUIRING PROTECTED OPENINGS SHALL BE FIRE STOPPED. FIRE STOP MATERIAL SHALL BE A TEST ASSEMBLY ACCEPTABLE TO LOCAL FIRE MARSHALL.
16. ALL FIRE ALARM AND COMMUNICATIONS WIRES AND CABLES SHALL BE ONE CONTINUOUS LENGTH FROM A BUILDING TERMINAL CABINET TO ANOTHER BUILDING TERMINAL CABINET OR JUNCTION BOX. ABSOLUTELY NO SUBGRADE SPLICES WILL BE PERMITTED! PROVIDE TERMINAL BLOCKS WITH MOUNTING IN TERMINAL CABINETS ONLY AS REQUIRED.
17. EVERY ALARM SIGNALING DEVICE INSTALLED SHALL BE OF THE SAME BASIC TYPE (BELLS, HORNS, CHIMES, SPEAKERS, ETC.) AS ALL OTHER SIGNALING DEVICES IN THE FACILITY, (EXCEPTION: ANY SIGNALING DEVICES REQUIRED FOR THE DEAF OR HEARING IMPAIRED) (NFPA PAMPHLET 72).
18. THE FIRE ALARM DEVICE SUPPLIER SHALL FURNISH ALL SURFACE MOUNT ENCLOSURES FOR PULL STATIONS AND SKIRTS FOR ALL VISUAL AND AUDIO VISUAL DEVICES TO CONCEAL 4S BACK BOXES.
19. AFTER THE SYSTEM IS COMPLETED, ALL ADDRESSABLE DEVICES SHALL BE PROGRAMMED AT THE FACP ACCORDING TO THE ACTUAL BUILDING ROOM NUMBER OR LOCATION DESCRIPTIONS AS INDICATED BY THE OWNER.
20. A DEDICATED BRANCH CIRCUIT SHALL BE PROVIDED FOR FIRE ALARM EQUIPMENT. THIS CIRCUIT SHALL BE ENERGIZED FROM THE COMMON USE AREA PANEL AND SHALL HAVE NO OTHER OUTLETS. THE BREAKER SHALL HAVE A RED LOCKING DEVICE TO BLOCK THE HANDLE IN THE "ON" POSITION. THE CIRCUIT BREAKER SHALL BE LABELED "FIRE ALARM CIRCUIT CONTROL". CIRCUIT ID TO BE LABELED AT FIRE PANEL/EXTENDERS.
21. AUDIBLE FIRE ALARM SOUND LEVEL SHALL BE AT LEAST 15 dBA ABOVE THE AVERAGE AMBIENT SOUND LEVEL IN ALL OCCUPIABLE AREAS.
22. FIRE ALARM CONTRACTOR SHALL PROVIDE A "RECORD OF COMPLETION" TO THE INSPECTOR OF RECORD (I.O.R.) AFTER COMPLETION OF OPERATION ACCEPTANCE TEST.
23. VISUAL DEVICES SHALL NOT EXCEED 2 FLASHES PER SECOND AND SHALL NOT BE SLOWER THAN 1 FLASH EVERY SECOND. THE DEVICE SHALL HAVE A PULSING LIGHT SOURCE NOT LESS THAN 15 CANDELA. VISUAL DEVICES WITHIN 55' FROM EACH OTHER SHALL BE SYNCHRONIZED.
24. AUDIBLE DEVICES SHALL BE SYNCHRONIZED TEMPORAL CODE 3 PATTERN.
25. COORDINATE EXACT LOCATION OF ALL CEILING FIRE ALARM DEVICES IN FIELD.
26. ELECTRICAL CONTRACTOR SHALL FURNISH 24"x24" ACCESS PANELS TO AREAS THAT REQUIRE SERVICING, TROUBLE SHOOTING, ETC., AS REQUIRED. COORDINATE WITH ARCHITECT FOR ACCESS PANELS.
27. AUTOMATIC FIRE ALARM SYSTEMS SHALL TRANSMIT THE ALARM, SUPERVISORY AND TROUBLE SIGNALS TO AN APPROVED SUPERVISING STATION AS REQUIRED BY CFC 907.6.6.3. THE SUPERVISING STATION SHALL BE LISTED AS EITHER UL(FX OR UUS) BY UNDERWRITERS LABORATORY OR SHALL MEET THE REQUIREMENTS OF FACTORY MUTUAL RESEARCH APPROVAL STANDARD 3011. SUPERVISION OF SYSTEM AND LEASED TELEPHONE LINES SHALL BE ARRANGED BY OWNER.
28. PROVIDE ACCESSIBLE OPERATING HARDWARE AT INITIATIVE DEVICE (e.g., NOT REQUIRING TIGHT GRASPING, PINCHING OR TWISTING OF THE WRIST AND FORCE LESS THAN 5 LBS.)
29. DSA ARCHITECT AND OWNER SHALL BE NOTIFIED MINIMUM OF 48 HOURS PRIOR TO THE FINAL INSPECTION AND/OR TESTING.
30. THE CONTRACTOR SHALL ADJUST/INSTALL ALL DEVICES TO MAXIMIZE PERFORMANCE AND TO MINIMIZE FALSE ALARMS.
31. ALL FIRE ALARM WIRING SHALL BE FLP OR FPLP (FIRE POWER LIMITED OR FIRE POWER LIMITED PLENUM) AS REQUIRED FOR APPLICATION. WIRING IN CONDUIT ABOVE GROUND MAY BE THHN OR THWN.
32. SMOKE DETECTORS SHALL NOT BE ANY CLOSER THAN 1' FROM FIRE SPRINKLERS OR 3' FROM ANY SUPPLY DIFFUSER. IN AREA OF CONSTRUCTION OR POSSIBLE DAMAGE/CONTAMINATION ON NEWLY INSTALLED FIRE ALARM, DEVICES SHALL BE COVERED UNTIL THAT AREA IS READY TO BE TURNED OVER TO THE OWNER.
33. THE INSTALLING CONTRACTOR SHALL PROVIDE A RECORD OF COMPLETION PER NFPA 72, FIGURES 7.8.2(a) - 7.8.2(f).
34. THE INSTALLING CONTRACTOR SHALL PROVIDE SYSTEM PROGRAMMING FOR SUPERVISORY MONITORING PER CBC SECTION 901.6.2.
35. FIRE ALARM SYSTEMS SHALL BE SUPERVISED BY AN APPROVED UL LISTED CENTRAL STATION, OR REMOTE STATION (UUFX) MONITORING COMPANY (UUUS) PER CFC 907.6.6.
36. SUPERVISORY MONITORING SHALL BE TESTED AND VERIFIED AS SENDING CORRECT SIGNALS IN CONJUNCTION WITH FINAL ACCEPTANCE TEST.
37. UNDERGROUND AND EXTERIOR CONDUITS TO HAVE WATERTIGHT FITTINGS AND WIRE TO BE APPROVED FOR WET LOCATIONS.
38. PER CEC STANDARDS, ALL WIRING IS TO BE PULLED THROUGH EACH JUNCTION BOX AND CONNECTED DIRECTLY TO EACH FIRE DEVICE. DO NOT SPLICE THE WIRE. THERE MUST BE AT LEAST 6' OF LEAD WIRE FROM THE BOX TO THE DEVICE. ALL BOXES TO BE SIZED PER CEC. (TYPICAL)

FIRE ALARM EQUIPMENT LIST

SYMBOL	MFG.	PART NO.	DESCRIPTION	REMARKS	CSFM LISTING
(E) FACP	SIMPLEX	4100ES	EXISTING ADDRESSABLE FIRE ALARM CONTROL PANEL WITH INTEGRATED VOICE EVACUATION SYSTEM (DSA #51861)		
(E) FAA	SIMPLEX	4603-9101	EXISTING FIRE ALARM ANNUNCIATOR		
	SIMPLEX	4099-9020	FIRE ALARM MANUAL PULL STATION		7150-0026:0224
S	SIMPLEX	4098-9714	ADDRESSABLE PHOTOELECTRIC SMOKE DETECTOR WITH 6 INCH BASE		7272-0026:0218
DD	SIMPLEX	4098-9756	ADDRESSABLE DUCT SMOKE DETECTOR HOUSING WITH RELAY AND REMOTE TEST SWITCH		3240-0026:0241
15cd 30cd 75cd 110cd	SIMPLEX	4906-9101	WALL MOUNTED FIRE ALARM MULTI-CANDELA STROBE - RED		7125-0026:0316
15cd 30cd 75cd 110cd	SIMPLEX	4906-9104	CEILING MOUNTED FIRE ALARM MULTI-CANDELA STROBE - WHITE		7125-0026:0316
15cd 30cd 75cd 110cd H	SIMPLEX	4906-9127	WALL MOUNTED FIRE ALARM MULTI-CANDELA COMBINATION HORN/STROBE - RED		7125-0026:0317
C 15cd 30cd 75cd 110cd H	SIMPLEX	4906-9130	CEILING MOUNTED FIRE ALARM MULTI-CANDELA COMBINATION HORN/STROBE - WHITE		7125-0026:0317
WP	SIMPLEX	4901-9850	WEATHERPROOF WALL MOUNTED FIRE ALARM HORN - RED		7135-0026:0238
MM	SIMPLEX	4090-9001	MONITOR MODULE		7300-0026:0223
RM	SIMPLEX	4090-9002	RELAY MODULE		7300-0026:0223
FATC	-	-	FIRE ALARM TERMINAL CABINET 24"L x 24"W x 6"D		N/A

SA1
- INDICATES SIGNAL CIRCUIT #1
- INDICATES BUILDING DESIGNATION
- "S" INDICATES SIGNAL CIRCUIT

Z1A-XX
- INDICATES ADDRESS NUMBER
- INDICATES BUILDING DESIGNATION
- INDICATES SLC LOOP NUMBER

SCOPE OF WORK:
PROVIDE A COMPLETE AUTOMATIC FIRE ALARM SYSTEM IN ACCORDANCE TO 2022 NFPA-72 AND CCR TITLE 24, PART 2, SECTION 907.2.3.

FIRE WATCH NOTE:
EXISTING FIRE ALARM SYSTEM MUST REMAIN IN PLACE AND MUST BE OPERATIONAL AT ALL TIMES UNTIL NEW SYSTEM IS IN PLACE. WHERE FIRE ALARM SYSTEM IS SHUT DOWN DUE TO RENOVATION. FIRE WATCH MUST BE PROVIDED BY CONTRACTOR. FIRE WATCH MUST BE PROVIDED WHERE SYSTEM IS DISCONNECTED AND MUST REMAIN UNTIL SYSTEM IS RECONNECTED AND COMPLETELY FUNCTIONAL IN ORDER TO MINIMIZE DOWN TIME. CONTRACTOR MUST COMPLETE WORK DURING BUSINESS HOURS AND MAINTAIN FIRE SYSTEM IN FULL OPERATION AFTER HOURS.

NOTE:
FIRE ALARM SYSTEM IS ADDRESSABLE. NAC CIRCUITS SHALL BE SYNCHRONIZED PER FLOOR.

NOTE:
CONTRACTOR SHALL SUPPLY EQUIPMENT AS PER LISTING OR APPROVED EQUAL. SUBSTITUTE OF ANY KIND SHALL REQUIRE CONTRACTOR TO RE-SUBMIT TO DSA FOR APPROVAL.

FIRE ALARM WIRING SCHEDULE

DESIGNATION	WIRE/CONDUIT TYPE	MAUFACTURER PART NUMBER	APPLICATION
#D	16/2 UNSHIELDED TWISTED PAIRS (UTSP)	BELDEN OR EQUAL PART No. AS REQUIRED	DATA LINE (SLC LOOP)
#P	2 #12 THWN	-	POWER CIRCUIT
#S	2 #12 THWN	-	SIGNAL CIRCUIT

*NUMBER ADJACENT TO DESIGNATION INDICATES QUANTITY OF CIRCUIT.
(I.E. 2S INDICATES TWO 2C #12 CABLES).
"U" DESIGNATES UNDERGROUND RATED CABLE

ANCHORAGE AND BRACING NOTES

MEP COMPONENT ANCHORAGE NOTE

ALL MECHANICAL, PLUMBING, AND ELECTRICAL COMPONENTS SHALL BE ANCHORED AND INSTALLED PER THE DETAILS ON THE DSA APPROVED CONSTRUCTION DOCUMENTS. THE FOLLOWING COMPONENTS SHALL BE ANCHORED OR BRACED TO MEET THE FORCE AND DISPLACEMENT REQUIREMENTS PRESCRIBED IN THE 2022 CBC, SECTIONS 1617A.1.18 THROUGH 1617A.1.26 AND ASCE 7-16 CHAPTER 13, 26, AND 30.

1. ALL PERMANENT EQUIPMENT AND COMPONENTS.
2. TEMPORARY, MOVABLE OR MOBILE EQUIPMENT THAT IS PERMANENTLY ATTACHED (E.G. HARD WIRED) TO THE BUILDING UTILITY SERVICES SUCH AS ELECTRICITY, GAS, OR WATER. "PERMANENTLY ATTACHED" SHALL INCLUDE ALL ELECTRICAL CONNECTIONS EXCEPT PLUGS FOR 110/220 VOLT RECEPTACLES HAVING A FLEXIBLE CABLE.
3. TEMPORARY, MOVABLE OR MOBILE EQUIPMENT WHICH IS HEAVIER THAN 400 POUNDS OR HAS A CENTER OF MASS LOCATED 4 FEET OR MORE ABOVE THE ADJACENT FLOOR OR ROOF LEVEL THAT DIRECTLY SUPPORT THE COMPONENT IS REQUIRED TO BE RESTRAINED IN A MANNER APPROVED BY DSA.

THE FOLLOWING MECHANICAL AND ELECTRICAL COMPONENTS SHALL BE POSITIVELY ATTACHED TO THE STRUCTURE BUT NEED NOT DEMONSTRATE DESIGN COMPLIANCE WITH THE REFERENCES NOTED ABOVE. THESE COMPONENTS SHALL HAVE FLEXIBLE CONNECT

SIMPLEX 4100ES Battery Calculations **FILLMORE MIDDLE SCHOOL - BLDG F - GYM HVAC REPLACEMENT** (E) FACP-F Data Loop Z1F						
Description	**Quantity**		**Standby (Amps)**	**Total Standby (Amps)**	**Alarm (Amps)**	**Total Alarm (Amps)**
EXISTING LOADS				**0.470000**		**5.020000**
DUCT SMOKE DET (4098-9756)	3	x	0.003000	0.009000	0.015000	0.045000
Total:				0.479000		5.065000

Battery Calculation	**Time Multiplier**				**Amp Hours**
Supervisory Hours	24	x	0.479000	=	11.496000
Alarm Hours	0.250	x	5.065000	=	1.26625
Total Amp Hours				=	12.762250
Total Amp Hrs X 25% Safety Margin				=	15.952813
Battery Provided (AH)				=	33.000000

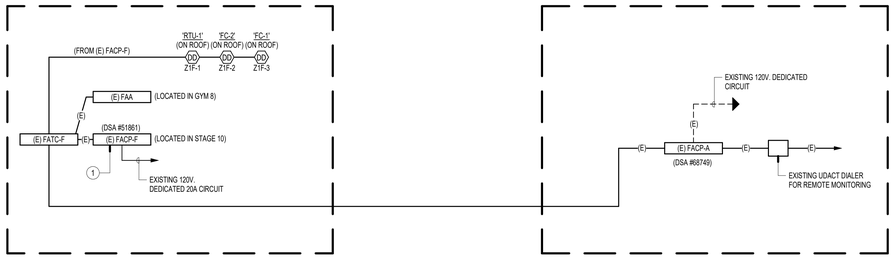

EXISTING BUILDING F - GYM

(E) MAIN BUILDING "A"

GENERAL NOTES

1. REFER TO PLANS FOR WIRING REQUIREMENTS.

CONSTRUCTION NOTES

1 PROVIDE ALL NECESSARY COMPONENTS, MODULES, SLC LOOP CARDS, ETC. FOR A COMPLETE AND OPERABLE SYSTEM.

IDENTIFICATION STAMP
DIV. OF THE STATE ARCHITECT
APP: 03-125539 INC:
REVIEWED FOR
SS ☑ FLS ☑ ACS ☐
DATE: 03/27/2026

WESTGROUP DESIGNS
19900 MacArthur Boulevard I Suite 1000
Irvine I California I 92612
949.250.0880 I FAX 949.250.0882
www.westgroupdesigns.com

REGISTERED PROFESSIONAL ENGINEER
RANDEN KEMPER
No. 22839
SIGNED:02/04/2026
ELECTRICAL
STATE OF CALIFORNIA

412 E. Vanderbilt Way
San Bernardino, CA 92408
Phone: 909.890.3700
Fax: 909.890.3770
Email: cadd@designwesteng.com
DESIGN WEST ENGINEERING
MECHANICAL - ELECTRICAL - ENERGY CONSULTANTS

FILLMORE MIDDLE SCHOOL - BUILDING F - GYM - HVAC REPLACEMENT

FILLMORE UNIFIED SCHOOL DISTRICT

543 A St, Fillmore, CA 93015

ISSUED FOR:
DSA V2 SUBMITTAL 11/21/25

REVISIONS:

REGISTRATION/SIGNATURE:

SHEET TITLE:
FIRE ALARM RISER DIAGRAM & BATTERY CALCS

SHEET NUMBER:
FA0-0.2

WD PROJ. #	DRAWN BY:	CHECKED	DATE
25817	SA / MH	RL	09/10/25

© WESTGROUP DESIGNS, INC.

25-099

PRINTED: 2/4/2026 11:33:20 AM
PATH: Autodesk Docs://25-099 Fillmore Middle School Gym HVAC Replacement/25-099 Fillmore Middle School Gym HVAC Replacement_MEP_Central_R24.rvt

GENERAL NOTES

1. ALL SITE UNDERGROUND CONDUIT TO BE 1" MIN. UNLESS OTHERWISE NOTED.

CONSTRUCTION NOTES

1. EXISTING FIRE ALARM CONTROL PANEL.

IDENTIFICATION STAMP
DIV. OF THE STATE ARCHITECT
APP: 03-125539 INC:
REVIEWED FOR
SS ☑ FLS ☑ ACS ☐
DATE: 03/27/2026

WESTGROUP DESIGNS
19900 MacArthur Boulevard I Suite 1000
Irvine I California I 92612
949.250.0880 I FAX 949.250.0882
www.westgroupdesigns.com

REGISTERED PROFESSIONAL ENGINEER
DARREN KEMPER
No. 22839
SIGNED:02/04/2026
ELECTRICAL
STATE OF CALIFORNIA

412 E. Vanderbilt Way
San Bernardino, CA 92408
Phone: 909.890.3700
Fax: 909.890.3770
Email: cadd@designwesteng.com
DESIGN WEST ENGINEERING
MECHANICAL - ELECTRICAL - ENERGY CONSULTANTS

FILLMORE MIDDLE SCHOOL - BUILDING F - GYM - HVAC REPLACEMENT

FILLMORE UNIFIED SCHOOL DISTRICT

543 A St, Fillmore, CA 93015

ISSUED FOR:
DSA V2 SUBMITTAL 11/21/25

REVISIONS:

REGISTRATION/SIGNATURE:

SHEET TITLE:
FIRE ALARM SITE PLAN

SHEET NUMBER:
FA1-1.1

WD PROJ. #	DRAWN BY:	CHECKED	DATE
25817	SA / MH	RL	09/10/25

© WESTGROUP DESIGNS, INC.

25-099

FIRE ALARM SITE PLAN | SCALE: 1/16" = 1'-0" | 1

PRINTED: 2/4/2026 11:33:20 AM
PATH: Autodesk Docs://25-099 Fillmore Middle School Gym HVAC Replacement/25-099 Fillmore Middle School Gym HVAC Replacement_MEP_Central_R24.rvt

GENERAL NOTES

1. REFER TO FIRE ALARM LEGENDS AND NOTES SHEET FOR ADDITIONAL DEMOLITION NOTES.

DEMOLITION NOTES

1. EXISTING FIRE ALARM INITIATING DEVICE TO REMAIN AND BE PROTECTED IN PLACE.
2. EXISTING FIRE ALARM NOTIFICATION DEVICE TO REMAIN AND BE PROTECTED IN PLACE.

FIRE ALARM DEMOLITION PLAN | SCALE: 1/8" = 1'-0" | 1

IDENTIFICATION STAMP
DIV. OF THE STATE ARCHITECT
APP: 03-125539 INC:
REVIEWED FOR
SS ☑ FLS ☑ ACS ☐
DATE: 03/27/2026

WESTGROUP DESIGNS
19900 MacArthur Boulevard I Suite 1000
Irvine I California I 92612
949.250.0880 I FAX 949.250.0882
www.westgroupdesigns.com

REGISTERED PROFESSIONAL ENGINEER
RICHARD KEMPF
No. 22839
SIGNED:02/04/2026
ELECTRICAL
STATE OF CALIFORNIA

412 E. Vanderbilt Way
San Bernardino, CA 92408
Phone: 909.890.3700
Fax: 909.890.3770
Email: cadd@designwesteng.com
DESIGN WEST ENGINEERING
MECHANICAL - ELECTRICAL - ENERGY CONSULTANTS

FILLMORE MIDDLE SCHOOL - BUILDING F - GYM - HVAC REPLACEMENT

FILLMORE UNIFIED SCHOOL DISTRICT

543 A St, Fillmore, CA 93015

ISSUED FOR:
DSA V2 SUBMITTAL 11/21/25

REVISIONS:

REGISTRATION/SIGNATURE:

SHEET TITLE:
FIRE ALARM DEMO PLAN - FIRST FLOOR

SHEET NUMBER:
FA2-2.1

WD PROJ. #	DRAWN BY:	CHECKED	DATE
25817	SA / MH	RL	09/10/25

© WESTGROUP DESIGNS, INC.

25-099

PRINTED: 2/4/2026 11:33:21 AM
PATH: Autodesk Docs://25-099 Fillmore Middle School Gym HVAC Replacement/25-099 Fillmore Middle School Gym HVAC Replacement_MEP_Central_R24.rvt

GENERAL NOTES

1. ALL FIRE ALARM WIRING SHALL BE INSTALLED IN CONDUIT SYSTEMS. FIRE ALARM CONDUIT SHALL BE 3/4" MINIMUM UNLESS OTHERWISE NOTED.
2. REFER TO POWER PLANS FOR CIRCUIT INFORMATION FEEDING NEW FIRE ALARM EQUIPMENT/DEVICES.

CONSTRUCTION NOTES

1. ROUTE 1/2"C. TO HVAC UNIT CONTROL PANEL FOR SHUT-DOWN.

FIRE ALARM PLAN | SCALE: 1/8" = 1'-0" | 1

IDENTIFICATION STAMP
DIV. OF THE STATE ARCHITECT
APP: 03-125539 INC:
REVIEWED FOR
SS ☑ FLS ☑ ACS ☐
DATE: 03/27/2026

WESTGROUP DESIGNS
19900 MacArthur Boulevard I Suite 1000
Irvine I California I 92612
949.250.0880 I FAX 949.250.0882
www.westgroupdesigns.com

REGISTERED PROFESSIONAL ENGINEER
RAYMOND KEMPER
No. 22839
SIGNED:02/04/2026
ELECTRICAL
STATE OF CALIFORNIA

412 E. Vanderbilt Way
San Bernardino, CA 92408
Phone: 909.890.3700
Fax: 909.890.3770
Email: cadd@designwesteng.com
DESIGN WEST ENGINEERING
MECHANICAL - ELECTRICAL - ENERGY CONSULTANTS

FILLMORE MIDDLE SCHOOL - BUILDING F - GYM - HVAC REPLACEMENT

FILLMORE UNIFIED SCHOOL DISTRICT

543 A St, Fillmore, CA 93015

ISSUED FOR:
DSA V2 SUBMITTAL 11/21/25

REVISIONS:

REGISTRATION/SIGNATURE:

SHEET TITLE:
FIRE ALARM PLAN - FIRST FLOOR

SHEET NUMBER:
FA2-3.1

WD PROJ. #	DRAWN BY:	CHECKED	DATE
25817	SA / MH	RL	09/10/25

© WESTGROUP DESIGNS, INC.

25-099

PRINTED: 2/4/2026 11:33:21 AM
PATH: Autodesk Docs://25-099 Fillmore Middle School Gym HVAC Replacement/25-099 Fillmore Middle School Gym HVAC Replacement_MEP_Central_R24.rvt

NOTES:

1. ALL WALL-MOUNTED VISUAL & AUDIBLE/VISUAL SIGNALING APPLIANCES SHALL BE MOUNTED SUCH THAT THE ENTIRE BOTTOM LENS IS NOT LESS THAN 80" AND TOP OF LENS IS NOT GREATER THAN 96" ABOVE THE FINISHED FLOOR (A.F.F.) PER NFPA 72 2022 SECTION 18.5.5.1

   ALL WALL MOUNTED AUDIBLE DEVICES SHALL BE A MINIMUM OF 90" A.F.F. TO TOP OF DEVICE PER NFPA 72 2022 SECTION 18.4.9.1. AREAS HAVING MORE THAN 2 STROBES IN THE FIELD OF VIEW SHALL BE SYNCHRONIZED PER NFPA 72 2022 SECTION 18.5.5.7.2.

2. THE OPERABLE PART OF A MANUALLY ACTUATED ALARM-INITIATING DEVICE SHALL BE NOT LESS THAN 42" AND NOT MORE THAN 48" FROM THE FINISHED FLOOR PER 2022 NFPA 72 17.15.6.

3. WEATHERPROOF SPEAKER SHALL BE WALL MOUNTED A MINIMUM OF 90" ABOVE FLOOR. MEASUREMENTS ARE TO BE TAKEN FROM THE HIGHEST PORTION OF SPEAKER.

4. PER NFPA 72 2022 EDITION, SECTION 17.7.4.2.1 SPOT-TYPE SMOKE DETECTORS SHALL BE LOCATED ON THE CEILING OR, IF ON A SIDE WALL, BETWEEN THE CEILING AND 12" (300mm) DOWN FROM THE CEILING TO THE TOP OF THE DETECTOR.

5. PER NFPA 72 2022 EDITION, SECTION 17.6.3.1.3.1 SPOT-TYPE HEAT-SENSING FIRE DETECTORS SHALL BE LOCATED ON THE CEILING NOT LESS THAN 4" (100mm) FROM THE SIDEWALL OR ON THE SIDEWALLS BETWEEN 4" AND 12" (100mm AND 300mm FROM THE CEILING.

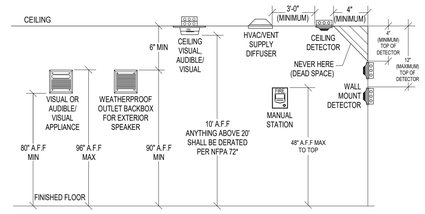

* DE-RATED STROBES SHALL MEET THE REQUIREMENTS OF 2022 NFPA 72 SECTION 18.5.5.9 "PERFORMANCE - BASED ALTERNATIVE".

DEVICE MOUNTING ELEVATIONS 1

SYSTEM OUTPUTS

		CONTROL UNIT ANNUNCIATION						NOTIFICATION												REQUIRED FIRE SAFETY CONTROL																		SUPPLEMENTARY			
		ACTIVATE CONTROL PANEL TROUBLE BUZZER AND LED	ACTIVATE CONTROL PANEL SUPERVISORY BUZZER AND LED	ACTIVATE CONTROL PANEL ALARM BUZZER AND LED	ANNUNCIATE AT REMOTE FIRE ALARM ANNUNCIATOR	SEND SIGNAL TO CENTRAL STATION (SIGNAL ATTENDED LOCATION)	ACTIVATE ALL AUDIBLE/VISUAL DEVICES THROUGHOUT THE BUILDING	NOTIFY FIRE DEPARTMENT VIA CENTRAL STATION	SHUTDOWN REQUIRED AIR HANDLING UNIT UNITS THROUGHOUT BLDG	CLOSE ALL COMMON SMOKE FIRE DAMPERS THROUGHOUT BLDG	RELEASE ALL ELECTROMAGNETICALLY HELD DOORS THROUGHOUT BLDG	UNLOCK ALL ELECTRICALLY LOCKED DOORS IN BUILDING	CLOSE ALL WINDOW COVERINGS THROUGHOUT BLDG	ACTIVATE SMOKE CONTROL SEQUENCE	CAUSE ILLUMINATION OF THE BEARING OF EGRESS WITH LIGHT NOT LESS THAN 1 FOOT-CANDLE AT THE FLOOR LEVEL	
SYSTEM INPUTS		A	B	C	D	E	F	G	H	I	J	K	L	M	N	O	P	Q	R	S	T	U	V	W	X	Y	Z	AA	BB	CC	DD	EE	FF	GG	HH						
1	MANUAL PULL STATION			●		●	●	●																		●			●			●				1					
2	AREA SMOKE DETECTOR/HEAT DETECTOR			●		●	●	●				●						●	●		●					●	●		●			●				2					
3	AIR DUCT SMOKE DETECTOR		●			●		●										●	●		●					●	●		●							3					
4																																				4					
5	FACP 120VAC POWER FAILURE	●				●		●										●	●		●					●	●									5					
6	FIRE ALARM SYSTEM DEVICE WIRING TROUBLE/FAULT	●				●		●																												6					
7	OPEN CIRCUIT	●				●		●																												7					
8	GROUND FAULT	●				●		●																												8					
9																																				9					
10																																				10					
		A	B	C	D	E	F	G	H	I	J	K	L	M	N	O	P	Q	R	S	T	U	V	W	X	Y	Z	AA	BB	CC	DD	EE	FF	GG	HH						

SEQUENCE OF OPERATIONS 2

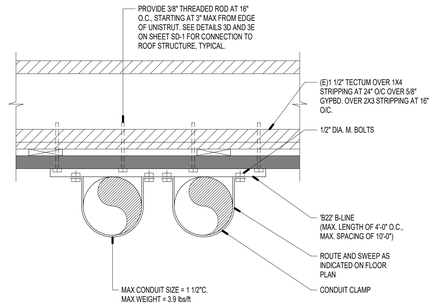

GENERAL NOTES:

1. REFER TO FLOOR PLAN FOR CONDUIT SIZE, LOCATION AND QUANTITY

CONDUIT SUPPORT 3

IDENTIFICATION STAMP
DIV. OF THE STATE ARCHITECT
APP: 03-125539 INC:
REVIEWED FOR
SS ☑ FLS ☑ ACS ☐
DATE: 03/27/2026

WESTGROUP DESIGNS
19900 MacArthur Boulevard I Suite 1000
Irvine I California I 92612
949.250.0880 I FAX 949.250.0882
www.westgroupdesigns.com

REGISTERED PROFESSIONAL ENGINEER
STEPHEN KEMPE
No. 22839
SIGNED: 02/04/2026
ELECTRICAL
STATE OF CALIFORNIA

412 E. Vanderbilt Way
San Bernardino, CA 92408
Phone: 909.890.3700
Fax: 909.890.3770
Email: cadd@designwesteng.com
DESIGN WEST ENGINEERING
MECHANICAL · ELECTRICAL · ENERGY CONSULTANTS

FILLMORE MIDDLE SCHOOL - BUILDING F - GYM - HVAC REPLACEMENT

FILLMORE UNIFIED SCHOOL DISTRICT
543 A St, Fillmore, CA 93015

ISSUED FOR:
DSA V2 SUBMITTAL 11/21/25

REVISIONS:

REGISTRATION/SIGNATURE:

SHEET TITLE:
FIRE ALARM DETAILS

SHEET NUMBER:
FA3-1.1

WD PROJ. #	DRAWN BY:	CHECKED	DATE
25817	SA / MH	RL	09/10/25

© WESTGROUP DESIGNS, INC.

25-099

PRINTED: 2/4/2026 11:33:21 AM
PATH: Autodesk Docs://25-099 Fillmore Middle School Gym HVAC Replacement/25-099 Fillmore Middle School Gym HVAC Replacement_MEP_Central_R24.rvt